Caldwell County
North Carolina
Board of Commissioners Meeting

September 22, 2025 at 6:00 PM
City-County Chambers
905 West Avenue NW, Lenoir

AGENDA

Call to Order ***Chairman Randy T. Church***

Public Comment Period

Invocation ***Pastor Chris Kirby, Setzer's Creek Baptist Church***

Pledge of Allegiance ***Commissioner, Donnie Potter***

Agenda Amendments from the Board, Manager & Public

Agenda Items

1.	Items for Decision *Josh Angle*	2015 Tax Release
2.	Presentation *Paige Counts*	America 250
3.	Presentation *Abby Rich*	Loss of Records- Server Error
4.	Presentation *Trevor Key*	Western North Carolina Joint Emergency Operations Center
	Items for Decision	Emergency Services — Warehouse Lease Renewal

Consent

5.	Budget Revisions	Animal Care and Enforcement- Requested Use of Donated Funds
6.	Items for Decision	CCSO- Undercover Vehicle Trade-In
7.	Budget Revisions	Communications- Purchase of Recorder for Communications Center
8.	Budget Revisions	Communications- Purchase of New Antenna for Communications Center
9.	Budget Revisions	DSS- Foster Children Placement Funds

10.	Budget Revisions	Health Department- Generator Purchase
11.	Budget Revisions	Health Department-WIC Funding Flow Through
12.	Budget Revisions	Facilities Services- Mowing Contract
13.	Budget Revisions	Market Adjustment for Level 3 Building Inspector
14.	Items for Decision	CCSO- Application Submission Request for NC Community Foundation Grant
15.	Items for Decision	CCSO- Application Submission Request for CSX grant
16.	Items for Decision	CCSO- Application Submission Request for Norfolk Southern Grant
17.	Items for Decision	CCSO- Application Submission Request for kNot Today Grant
18.	Items for Decision	Economic Development - Building Reuse Grant Proposal for Project Clean Meds
19.	Items for Decision	Ratify Proclamation for 250th Anniversary of Littlejohn United Methodist
20.	Items for Decision	Water - Surplus of Vehicles
21.	Items for Decision	Donation of Computers to the Public School System
22.	Items for Decision	Town of Sawmills Fireworks Application
23.	Resolution	Opioid Settlement- Purdue & Sackler
24.	Items for Decision	Reappointment of Granite Falls ETJ Planning Members
25.	Items for Decision	Appointment to the Regional Aging Advisory Committee
26.	Items for Decision	Approval of Minutes from August 11, 2025, Meeting

Closed Session-Pursuant to § 143-318.11.a(6) and § 143-318.11.a(3)

Adjourn

Board of Commissioners Meeting
Agenda Item Summary

MEETING DATE	DEPARTMENT	PREPARED BY
September 22, 2025	Tax	Josh Angle

AGENDA ITEM # 1

2015 Tax Release

BACKGROUND

RECOMMENDED MOTION

BUDGET IMPACT

APPROVED FOR BUDGET YEAR

No

ATTACHMENTS

1. Write Off 2015 taxes 9-12-2025 Memo (1)

MEMORANDUM

THRU: Wayne Rash, Interim County Manager

TO: Board of County Commissioners

FROM: Josh Angle, Tax Administrator

DATE: September 12, 2025

REQUIRES BOARD ACTION

Each year we request release of 10-year-old delinquent property taxes, which are no longer collectible using enforced collection methods per NCGS 105-378(a).

Every effort has been made to collect these delinquent taxes.

Request release of the following tax amounts as indicated:

Real & personal property taxes for 2015 - $ 71,789.62

c.c. Candace McLean
Heather Kirby
Margaret Lester

Board of Commissioners Meeting

Agenda Item Summary

MEETING DATE	DEPARTMENT	PREPARED BY
September 22, 2025	Public Information	Paige Counts

AGENDA ITEM # 2

America 250

BACKGROUND

RECOMMENDED MOTION

BUDGET IMPACT

APPROVED FOR BUDGET YEAR

No

ATTACHMENTS

None

Board of Commissioners Meeting
Agenda Item Summary

MEETING DATE	DEPARTMENT	PREPARED BY
September 22, 2025	Administration	Abby Rich

AGENDA ITEM # 3

Loss of Records- Server Error

BACKGROUND

A necessary IT update caused a loss of public records from the previous County Clerk's online drive. While it is unknown what all records were lost, the following closed session minutes have not been recovered.

6/3/2019 (Property Acquisition) 7/22/2019 (Personnel)10/07/2019 (Not Specified)12/2/2019 (Consult w/Attorney)2/3/2020 (Consult w/Attorney & Property Acquisition)8/17/2020 (Consult w/Attorney) 9/14/2020 (Property Acquisition & Personnel) 11/16/2020 (Consult w/Attorney)5/17/2021 (Not Specified)6/21/2021 (Consult w/Attorney, Property Acquisition, & Personnel)7/19/2021 (Consult w/ Attorney) 9/13/2021 (Consult w/ Attorney)10/18/2021 (Personnel)11/15/2021 (Economic Development)

To mitigate future issues, all files will be saved to OneDrive and SharePoint. Additionally, all essential records, such as closed session minutes, will be printed and kept in a locked file until they are unsealed.

RECOMMENDED MOTION

BUDGET IMPACT

APPROVED FOR BUDGET YEAR

No

ATTACHMENTS

None

Board of Commissioners Meeting
Agenda Item Summary

MEETING DATE	DEPARTMENT	PREPARED BY
September 22, 2025	Emergency Services	Trevor Key

AGENDA ITEM # 4

Western North Carolina Joint Emergency Operations Center

BACKGROUND

Caldwell County, in partnership with the Western Regional Emergency Management Office and other state agencies, has been jointly planning the co-location of the Caldwell County Emergency Operations Center and the Western Regional Emergency Management Office to form a new Western North Carolina Joint Operations Center. This joint operations facility will enable secure EOC capabilities, providing the flexibility to scale up or down for regional, statewide, or national events. The center will be a modern, safe, purpose-built facility with redundancy and the ability to create collaborative relationships across multiple disciplines in Emergency Services.

The North Carolina General Assembly has provided $XX to Caldwell County for this project.

While design and construction estimate work has started for the construction of a new facility, a secondary, and possibly more economical option has prevailed. Staff would like to present a second location for consideration that would ensure the Joint Operations Center project budget would not exceed the funds already appropriated by the General Assembly.

RECOMMENDED MOTION

I move to approve this proposed change in the scope of the project and authorize the purchase of the new property as presented by staff.

BUDGET IMPACT

None. Funds appropriated for this project.

APPROVED FOR BUDGET YEAR

Yes

ATTACHMENTS

None

Board of Commissioners Meeting
Agenda Item Summary

MEETING DATE	DEPARTMENT	PREPARED BY
September 22, 2025	Emergency Services	

AGENDA ITEM # 4

Emergency Services — Warehouse Lease Renewal

BACKGROUND

As part of long-term Hurricane Helene response and recovery efforts, Caldwell County has been leasing the property at 2145 Norwood Street, Lenoir, NC 28645. All expenses through August 31, 2025, are FEMA reimbursable. This lease extension through December 31, 2025, is part of a larger strategic plan related to county Emergency Services and the Regional Communications Center, in partnership with the State of North Carolina Office of Emergency Management. Funds for this larger strategic plan have been allocated to Caldwell County by the NC General Assembly, as well as state agency partners.

RECOMMENDED MOTION

BUDGET IMPACT

APPROVED FOR BUDGET YEAR

No

ATTACHMENTS

1. Notice_to_Elect_Warehouse Lease_Renewal_Extension

NC REALTORS®
Commercial Forms

NOTICE TO ELECT LEASE RENEWAL/EXTENSION

Caldwell County North Carolina ("Tenant")

and _____ ("Landlord")

with respect to certain Premises located at: **2145 Norwood Street, Lenoir, NC 28633**
have previously entered into a lease agreement dated **October 2, 2024**, which lease agreement ☐ has not been amended or ☐ has been amended by the following documents (list name and date of any document(s) modifying the lease agreement):

_____

_____

(all documents referenced above being herein collectively the "Lease")

Landlord and Tenant hereby stipulate and certify that (choose only one option below):

☐ The Lease is hereby extended in accordance with the terms and conditions specified in the Lease.

☒ The Lease is hereby extended in accordance with the terms and conditions specified in the Lease with the exception of the revised rent schedule which shall be affixed hereto and become part of this Notice to Elect Lease Renewal/Extension.

As a result of the foregoing extension, the new termination date of the Lease is: **December 31, 2025**.

Tenant's failure to execute this Notice to Elect Lease Renewal/Extension shall constitute an election by Tenant to possess the Premises subject to the holdover provisions in the Lease, including any holdover rent provision therein. Except as modified herein, the Lease remains enforceable in accordance with its Tenant as originally set forth.

TENANT:

Individual

_____
Caldwell County North Carolina

Date: _____

_____

Date: _____

Business Entity:

Caldwell County North Carolina
(Name of Entity)

By: _____

Name: _____

Title: **County Manager**

Date: _____

LANDLORD:

Individual

_____

Date: _____

_____

Date: _____

Business Entity:

BUSCO I, LLC
(Name of Entity)

By: _____

Name: **David F. Underdown**

Title: **Managing Partner**

Date: _____

North Carolina Association of REALTORS®, Inc.

STANDARD FORM 594-T
Adopted 7/2017
© 7/2024

The Stump Corporation, 1043 East Morehead St, Suite 105 Charlotte NC 28204 Phone: **7043323535** Fax: **7043759739** **HSM Lenoir**
J. R. Stump, Jr.
Produced with Lone Wolf Transactions (zipForm Edition) 717 N Harwood St, Suite 2200, Dallas, TX 75201 www.lwolf.com

Board of Commissioners Meeting

Agenda Item Summary

MEETING DATE	DEPARTMENT	PREPARED BY
September 22, 2025	Animal Care Enforcement	

AGENDA ITEM # 5

Animal Care and Enforcement- Requested Use of Donated Funds

BACKGROUND

This budget revision allows Animal Care and Enforcement to use a portion of their donated funds.

RECOMMENDED MOTION

Approve Budget Revision

BUDGET IMPACT

No budget impact, uses donations.

APPROVED FOR BUDGET YEAR

No

ATTACHMENTS

1. Budget Revision-ACE Donated Funds

Budget Revision # _____

Item No. _____

Date: _____

Caldwell County Board of Commissioners

BUDGET REVISION

Subject: Use of Donated Funds

Background and explanation for the Budget Revision:

This revision allows Animal Care Enforcement to use $1,800.00 of the donated funds to purchase Rabies Vaccines and syringes for the free rabies vaccine clinic on October 18th, 2025. Also, this revision allows Animal Care Enforcement to use $2,500.00 of the donated funds to purchase live cat and dog traps. Many of our traps are old and have been damaged.

The Budget Ordinance is hereby amended by making a Supplemental Appropriation with appropriations and revenues being adjusted as follows:

SUPPLEMENTAL APPROPRIATION

Line Item #	Title	I/D	Amount	Line Item #	Title	I/D	Amount
10.5200.364501	Donated Funds		$ 4,300.00	105200-432900	Exp. Of Donated Funds		$ 4,300.00
Total			**4,300.00**	**Total**			**4,300.00**

Attachments (Yes or No):
Public Hearing (Yes or No):

Distribution:
Original - Finance Office
Duplicate - Clerk to the Board
Triplicate - Department Head

Staff Recommendation:

Board Action:

Department Head	Date	Finance Director	Date	County Manager	Date
			09/10/25		

Board of Commissioners Meeting
Agenda Item Summary

MEETING DATE	DEPARTMENT	PREPARED BY
September 22, 2025	Sheriff's Office	

AGENDA ITEM # 6

CCSO- Undercover Vehicle Trade-In

BACKGROUND

To cover the cost of 2 UC vehicles that have been compromised for the purchase of a new vehicle.

RECOMMENDED MOTION

Approval to use State Assest Seizure Funds

BUDGET IMPACT

N/A

APPROVED FOR BUDGET YEAR

No

ATTACHMENTS

1. Resolution for Private Sale of Surplus Vehicle Sept 2025
2. UnderCover Vehicle Trade Ins_Redacted

RESOLUTION

20-2025

DISPOSAL OF COUNTY-OWNED PROPERTY BY PRIVATE SALE

WHEREAS, Caldwell County owns certain items of personal property that have become surplus for its current needs; and

WHEREAS, North Carolina General Statute 160A-266 permits the County to sell such property by private sale upon authorization by the Board of Commissioners at a regular meeting and notice to the public; and

WHEREAS, the Board of Commissioners is convened in a regular meeting.

NOW THEREFORE, BE IT RESOLVED the Caldwell County Board of Commissioners authorizes the negotiated sale of a 2017, Cadillac CTS VIN # 1G6AX5SXXH0187608 and a 2010, GMC Sierra, VIN # 1GT4K1B61AF123694 for the sum of $31,000 and the County Clerk shall publish a notice summarizing this resolution, and no sale may be executed pursuant to this resolution until at least 10 days after the day the notice is published.

Adopted this the 22 day of September, 2025.

_____

Randy Church, Chairman of the Board
Caldwell County Board of Commissioners

ATTEST:

_____

Abby Rich, NCCCC
County Clerk

ic

Budget Revision # _____

Item No. _____

Caldwell County Board of Commissioners

BUDGET REVISION

Board Meeting: September 22, 2025

Subject: Undercover Vehicle Replacement

Background and explanation for the Budget Revision:

To cover the cost of an Narcotics vehicle used for undercover drug operations. Includes the trade-in of 2 compromised UC Vehicles- 2017 Cadillac CTS & 2010 GMC Sierra
This request requires no local funds.

The Budget Ordinance is hereby amended by making a Supplemental Appropriation with appropriations and revenues being adjusted as follows:

SUPPLEMENTAL APPROPRIATION

Revenue	Increase		**Expenditures:**	Increase	
Line Item #	Title	Amount	Line Item #	Title	Amount
104314-331100	ASSET SEIZ FUNDS	$ 4,700.00	104314-451001	Vehicles	$ 4,700.00
Total		**4,700.00**	**Total**		**4,700.00**

Attachments (Yes or No): NO
Public Hearing (Yes or No):

Distribution:
Original - Finance Office
Duplicate - Clerk to the Board
Triplicate - Department Head

Staff Recommendation:

Board Action:

Department Head	Finance Director	Date	County Manager	Date
Kevin H. Bean 9/4/2025				

Caldwell County

AGENDA ITEM SUMMARY

Submitter: **Sheriff Kevin Bean** **Meeting Date: 9/22/2025**

Agenda Section: **Consent** **Department: Sheriff**

Suggested Motion(s): Approval of Narcotics Vehicle Trade

SUMMARY: Request that we be able to use $4,700.00 from the State Asset Seizure Fund to cover the purchase of a new Narcotics Under Cover Vehicle. This vehicle will replace 2 undercover vehicles (2017 Cadillac & 2010 GMC) that have been compromised in an undercover capacity.

Budget Impact: **None, State Asset Funds**

Is this expenditure approved in the current fiscal year budget? No

If no, describe how it will be funded.

ATTACHMENTS: **See Attached Request & Documents**

CALDWELL COUNTY SHERIFF'S OFFICE
** SHERIFF KEVIN H. BEAN **
2351 MORGANTON BLVD. SW * LENOIR, NC 28645
PHONE: 828-758-2324 * FAX: 828-759-3490

Date: September 4, 2025

To: County Manager

RE: Narcotics Vehicle Replacement

At this time our office would like to request that we be able to use $4,700.00 from the State Asset Seizure Fund to cover the purchase of a new Narcotics Under Cover Vehicle. This vehicle will replace 2 undercover vehicles (207 Cadillac & 2010 GMC) that have been compromised in an undercover capacity. It is imperative that these vehicles be updated every so often for Officer Safety Purposes. Should you need any further information please contact Sheriff Kevin Bean @ 828-217-2761 or 828-759-1543.

Sincerely,

Kevin H. Bean

Sheriff Kevin H. Bean

CALDWELL COUNTY DOES NOT DISCRIMINATE ON THE BASIS OF RACE, COLOR, NATIONAL ORIGIN, SEX, RELIGION AGE OR DISABILITY IN EMPLOYMENT OR THE PROVISION OF SERVICES.

PUBLIC NOTICE

On Monday, September 22, 2025, the Caldwell County Board of Commissioners will vote on the approval of the private exchange of surplus property pursuant to § 160A-271. Caldwell County agrees to convey these personal properties for the sum of $31,000.00 to Cars Plus Lenoir, LLC.

The transferred property is as follows:

2017, Cadillac CTS VIN # 1G6AX5SXXH0187608

2010, GMC Sierra, VIN # 1GT4K1B61AF123694

Abigail L. Rich

Abby Rich
County Clerk/Assistant to Manager

COMMISSIONERS: RANDY T. CHURCH, CHAIRMAN | MIKE LABROSE, VICE-CHAIR
JEFF BRANCH | DONNIE POTTER | PATRICK STARNES
WAYNE RASH, INTERIM COUNTY MANAGER
www.caldwellcountync.org

838 Wilkesboro Blvd.
Lenoir, NC 28645
Car 1.888.781.1999 Toll Free
SUV/Trucks 1.888.664.7629 Toll Free
www.carsplusleqoir.com

CARS PLUS LENOIR LLC

Specializing in Toyota, Honda, BMW, Volvo, Nissan etc., 4x4's, Sports Utilities, Buses and Motorcycles

Car Center 828.757.9999
Truck Center 828.758.9929
FAX 828.754.8246

RETAIL ORDER FOR A MOTOR VEHICLE 7-17

PURCHASER'S NAME: Caldwell County
CITY/ST ADDRESS: PO Box 3200 | CITY: Lenoir | STATE: NC | ZIP: 28645
RESIDENCE PHONE: 795-0407 | BUSINESS PHONE | EMAIL ADDRESS

VEHICLE BEING PURCHASED

[redacted]

MAKE OF TRADE-IN: Cadillac - Sport Awd
YEAR: 17 | MODEL: CTS | BODY: 2.0T
VIN: 1G6AX5SXXH0187008
MILEAGE: 13000 | BY: Tyler

IF THE ODOMETER READING ON MY ABOVE TRADE READS ____ MILES, THE ODOMETER HAS ____ HAS NOT ____ EXCEEDED 100,000 MILES. SIGNATURE: _____

BALANCE OWED TO
ADDRESS

USED CAR TRADE-IN ALLOWANCE	$	
BALANCE OWED ON TRADE-IN		
NET ALLOWANCE ON TRADE-IN	$	
DEPOSIT OR CREDIT BALANCE		
CASH WITH ORDER	$	
TOTAL CREDIT (TRANSFER TO RIGHT COLUMN)	$	

INSURANCE AGENT

INSURANCE COMPANY
POLICY #
TAG # HHH-8259 EXPIRATION 8-26

ACCESSORIES	$	
☐ Leather		
☐ Navigation		
☐ DVD		
☐ Sunroof		
☐ Tow Package		
☐ Automatic		
☐ Other		
CASH PRICE OF VEHICLE & ACCESSORIES	$ 35700	
STATE AND LOCAL TAXES		
LICENSE, LICENSE TRANSFER, TITLE, REGISTRATION FEE		
TOWN, PRICE OF UNIT	$ 35700	
TOTAL CREDIT (TRANSFERRED FROM LEFT COLUMN)	$ 31000	
UNPAID CASH BALANCE DUE ON DELIVERY	$ 4700	

Purchaser agrees that this Order includes all of the terms and conditions on both the face and reverse side of hereof, that this Order cancels and supersedes any prior agreement and as of the date Purchaser executes and exhibits Purchaser's acceptance of the terms of the agreement relating to the subject matters covered hereby, and that THIS ORDER SHALL NOT BECOME BINDING UNTIL SUCH TIME AS DEALER HEREINAFTER SET FORTH.
Purchaser further represents that Purchaser has read the terms and conditions and has received a true copy of this Order.
If this order is for a used vehicle, the information you see on the (Federal Trade Commission) window form is part of this order. Information on the window form overrides any contrary provisions in the contract of sale.
*The Administrative Fee represents a reimbursement of our costs in preparing the documents related to the sale of this vehicle.

PURCHASER'S SIGNATURE _____ (BUYER)

Board of Commissioners Meeting
Agenda Item Summary

MEETING DATE	DEPARTMENT	PREPARED BY
September 22, 2025	Sheriff's Office	

AGENDA ITEM # 7

Communications- Purchase of Recorder for Communications Center

BACKGROUND

This budget revision allows for the purchase of a new recorder for the Communications Center.

RECOMMENDED MOTION

Approve Budget Revision

BUDGET IMPACT

Mostly funded by the 911 fund. A small portion comes from the existing budget at Comms.

APPROVED FOR BUDGET YEAR

No

ATTACHMENTS

1. Comm Center Recorder Purchase_0001
2. CRS Markup from 911 Eligibility
3. CRS Total Quote

Budget Revision # _____

Item No. _____

Date: _____

Caldwell County Board of Commissioners

BUDGET REVISION

Subject:

Background and explanation for the Budget Revision:

This budget revision allows for the purchase of a new recording system for the emergency communications center. The total cost of this item is $157,570. The majority of that amount, $152,340, is eligible for 911 funds. The remaining $5,230 can be covered by the existing budget in the comm center.

The Budget Ordinance is hereby amended by making a Supplemental Appropriation with appropriations and revenues being adjusted as follows:

SUPPLEMENTAL APPROPRIATION

Line Item #	Title	I/D		Amount
13.3000.397000	Fund Balance Appropriation 911 Fund	I	$	152,320.00
Total				**152,320.00**

Line Item #	Title	I/D		Amount
13.4309.451000	Equipment	I	$	152,320.00
Total				**152,320.00**

Attachments (Yes or No): Yes

Public Hearing (Yes or No):

Distribution:
Original - Finance Office
Duplicate - Clerk to the Board
Triplicate - Department Head

Staff Recommendation:

Board Action:

Department Head	Date	Finance Director	Date	County Manager	Date
			08/11/25		

Final Mark-up
8/6/2025

CAROLINA RECORDING SYSTEMS®

Caldwell County Emergency Services - New DX Solution

Quote # Q-00302
Version #:

PREPARED FOR:

Caldwell County Emergency Services

Becky Price
rrector@caldwellcountync.org

CAROLINA RECORDING SYSTEMS

07/24/2025

Becky Price
Caldwell County Emergency Services
2351 Morganton Boulevard Southwest
Lenoir, NC 28645

RE: Quote # Q-00302

Dear Becky Price,

Carolina Recording Systems (CRS) is thrilled to submit the enclosed proposal for Caldwell County Emergency Services. We have had the privilege of serving Caldwell County Emergency Services for many years, and we are grateful for the strong partnership we have built together.

As part of our commitment to delivering cutting-edge solutions and ensuring continued efficiency of your operations, we are excited to present a proposal for the refresh of your current logging recording system to the Eventide NexLog 740DX. Our goal is to enhance performance, increase reliability, and security while ensuring seamless integrations with your existing systems.

The dedicated CRS team is passionate about creating an unparalleled partnership with our customers and those they serve to ensure exceptional and focused service. We believe that this refresh will improve the performance of your operations and position Caldwell County Emergency Services for future growth.

Thank you for this opportunity. We value our partnership Caldwell County Emergency Services and remain dedicated to delivering exceptional service and innovative solutions.

Respectfully,

Rodney Watson

Rodney Watson
Sr. Account Manager
Carolina Recording Systems

CAROLINA RECORDING SYSTEMS

EXECUTIVE SUMMARY

Carolina Recording Systems is a leading managed service provider of mission-critical communication recording systems based in Charlotte, North Carolina. Operating since 2001, we pride ourselves in supplying solutions designed specifically to exceed the needs and requirements of mission-critical communication centers. We currently support over 250 customers, including public safety communications, hospitals, colleges & universities, airports, utilities, transit, and manufacturing organizations.

The Carolina Recording Systems Difference

Carolina Recording Systems understands the importance of personal relationships, customer service and accessibility. As a trusted partner to Caldwell County Emergency Services, our team's sole focus is to provide unrivaled customer service and direct support with knowledgeable Customer Account Managers, experienced and manufacturer certified Recording System Specialists, and focused Project Management.



Dedicated Customer Service & Support

Caldwell County Emergency Services will have direct access to CRS Recording Systems Specialists that are strategically located for comprehensive on-site implementation, rapid response service, and personalized training. Our Recording Systems Support Specialists are available 24x7 to monitor system alerts, provide remote and on-site support and unlimited training. We specialize in implementing and supporting solutions to enhance performance and increase efficiency. Our focus is to deliver solutions that align with your goals by prioritizing open communication and collaboration to ensure the success of every project.

CAROLINA RECORDING SYSTEMS

EXPERIENCE

Proposed Solution

To fulfill the recording requirements of Caldwell County Emergency Services, we are proposing the Eventide NexLog DX mission-critical communications recording system. Eventide currently has over 6,000 recorders deployed around the world, providing mission critical recording to over 3,600 Emergency Communication Centers. Eventide's recording systems are designed, assembled, tested, and supported exclusively in the USA.

Eventide's NexLog DX mission-critical communications logging system reliably captures, stores, protects, reproduces, and helps you manage important interactions and critical data. NexLog logging systems have been designed to help you securely document and retrieve incidents, comply with regulations, and improve your facility's operations. Eventide's NexLog recorders are stable purpose- built Linux appliances with over 45 integrations with other systems and applications found in Emergency Communications Centers.

System Design and Specifications

The Eventide NexLog operates on the purpose-built Linux operating system configured with multiple levels of resilience, including dual hot-swap redundant power supplies, redundant hard disk drives, redundant network capability (via NIC bonding), and multiple choices for archive redundancy and network archiving to another NexLog recorder. Eventide's recording systems are designed, assembled, tested, and supported exclusively in the USA.

Configuration, playback, retrieval, and incident management are accessed via a secured web interface. The web-based application eliminates the need for software to install or updates to manage. The system can also be accessed over a VPN without the need to install additional software, creating a simplified PC deployment process.

A multi-tier security system controls user access based on role and channel assignments. Password policy options include complex enforcement, automatic aging, change reminders, expiration, and lock-out. System access can also be controlled by an SMB share or active directory. In addition, each user's access and actions are audited and available for review.

The proposed NexLog recorder is equipped with RAID Array Storage that combines multiple hard disks into a logical drive for redundancy and increased performance. In the event of a drive failure, the logical drive is not affected. Data integrity and recording functions are unaffected and redundancy is automatically restored once the failed component is replaced.

CAROLINA RECORDING SYSTEMS

STATEMENT OF WORK

CRS will complete the following steps for Caldwell County Emergency Services:

- Conduct an initial project kickoff and site walkthrough to assess installation environment and requirements and structure cabling details and requirements.
- Document critical technical details required to complete recorder configuration such as TCP/IP addresses, system hostname, NTP server, channel definition and requirements, etc.
- Complete NexLog DX system burn-in and staging to ensure no immediate component failure.
- If purchased, complete NAS system burn-in and staging to ensure no immediate component failure.
- Configure basic recording solution system parameters as a part of the system staging process for recorder(s).
- Transport the recording solution to the Caldwell County Emergency Services data center for onsite staging.
- Mount new 66 blocks and run new analog cabling.
- Rack and power the NexLog DX(s), and NAS if purchased, within respective data center locations.
- Configure advanced recording solution system parameters required for radio and phone integration for recorder(s).
- If purchased, install screen agents onto CAD systems for agent desktop recording for recorder(s).
- If purchased, configure add-on integrations for recorder.
- Conduct end user training for Caldwell County Emergency Services personnel.

In addition to completing the above steps as a part of the recording solution implementation, CRS will provide a dedicated project manager to ensure consistent project status communication and on-time, on budget project delivery.

Customer Responsibilities

- Provide access to facilities for the installation team.
- Ensure availability of necessary network connections.
- Coordinate with relevant personnel for integration purposes.
- Coordinate with required third party vendors to provide the proper inputs, identified and terminated,
- Ensure required third party licensing, installation, and integration work is completed by appropriate vendor.

CAROLINA RECORDING SYSTEMS

System Design

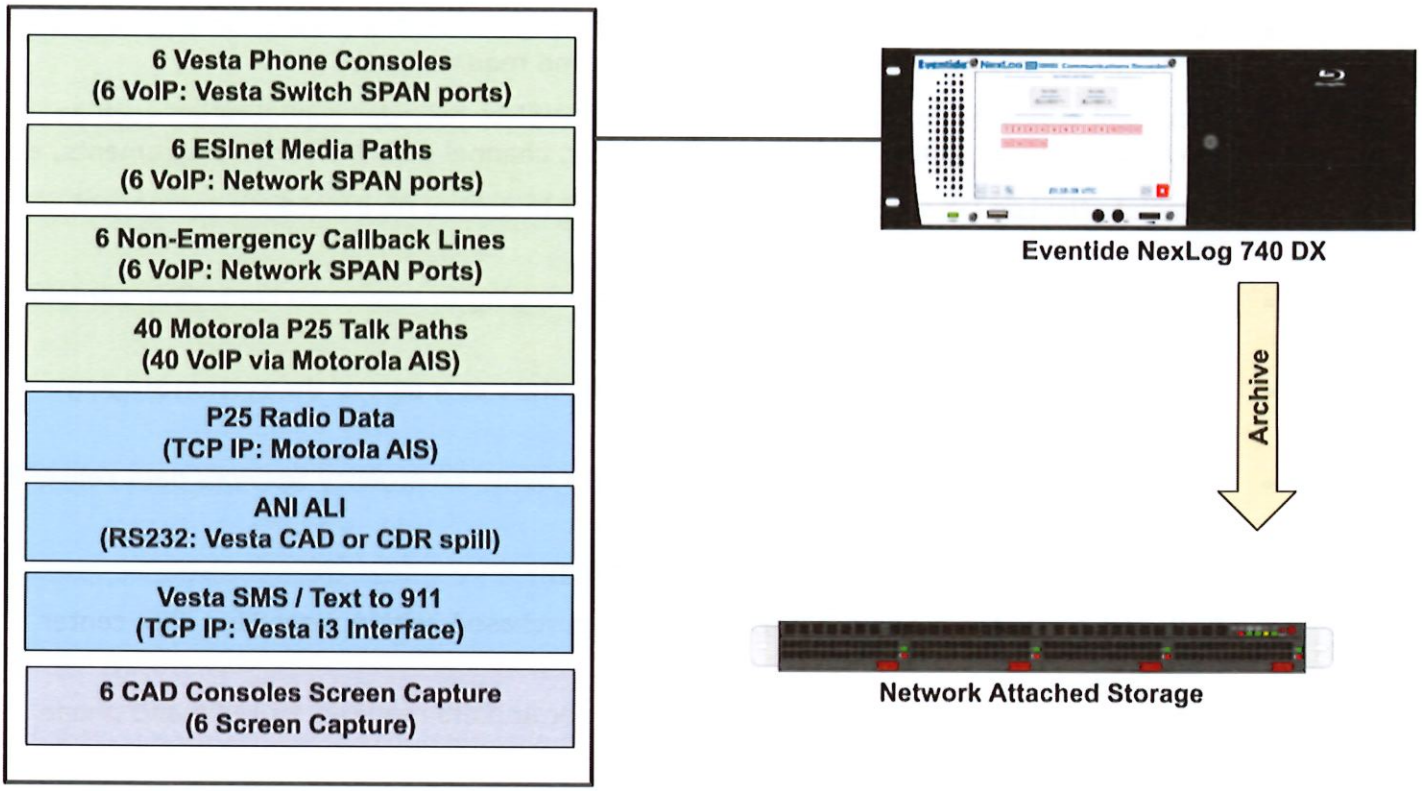

CAROLINA RECORDING SYSTEMS

Eventide®

LETTER OF CERTIFICATION

January 1, 2024

To: Whom it may concern:

Subject: Eventide Fully Certified Factory Trained Sales & Service Center

Eventide has certified **Carolina Recording Systems** as the only Premier Dealer and fully authorized Eventide **factory trained sales and service center** for the region covering North Carolina, South Carolina, West Virginia, Virginia, & District of Columbia. As such, superior sales support and after sales service support can be guaranteed.

Carolina Recording Systems is the **only company** in this region to receive this certification from Eventide.

Cordially,

Gordon Moore General Manager Eventide

Copy:
Byron Burns Owner
Carolina Recording Systems Ph: (704) 578-8025
Fax: (888) 776-0201
byron.burns@crsnc.com

CAROLINA RECORDING SYSTEMS

Account Manager:	Ship To:	Bill To:	Quote #
Rodney Watson Sr. Account Manager (864) 619-9271 rodney.watson@crsnc.com	Becky Price rrector@caldwellcountync.org 2351 Morganton Boulevard Southwest Lenoir, NC 28645	Becky Price rrector@caldwellcountync.org 2351 Morganton Boulevard Southwest Lenoir, NC 28645	Q-00302 **Quote Date:** 07/24/2025 **Quote Expiration:** 09/30/2025

Eventide NexLog 740 DX

Product Details		Quantity	Unit Price	Ext. Price
NexLog740DX	NexLog 740 DX-Series base system: 3U rack-mountable, Core i5 CPU, 16GB DDR4 RAM, 2 x2TB fixed-Mount HDDs (RAID 1), 1 Blu-ray Multi-Drive, 2 Network Ports (100/1000), Embedded Linux, NexLog DX-Series software, web- based configuration manager, audio controls & amplified speaker on front panel, dual hot-swap 120-240VAC 50/60Hz power supplies and first year hardware warranty. Requires ongoing Eventide DX Software Update Subscription (DXSUS) for access to critical DX-Series Software & Security Updates.	1	$9,600.00	$9,600.00
DX701	Integrated 7" Color LCD Touch Screen Display for NexLog 740 DX-Series	1	$1,750.00	$1,750.00
DX730	Standard NexLog 740 DX-Seriess Archive: 1 Blu-ray Drive (also supports single-side DVD-RAM media)	1	$0.00	$0.00
324430-DX	Rack Mount Slides - 26" 4 Post, 3U (for NexLog 740DX)	1	$360.00	$360.00
271052	Internal IP Recorder with First 8 G.711 Channels	1	$4,200.00	$4,200.00
DX939	DX Series 8 Channel VoIP Add-On	7	$1,920.00	$13,440.00
DX755	Quad Port 100/1000 PCIe (PCI Express) Network Card (for NexLog 740 DX-Series recorder only)	1	$1,440.00	$1,440.00
DX912	Motorola VESTA NG911 Call Recording Bundle (Voice, Metadata and SMS)	1	$10,900.00	$10,900.00
271070	Windows Screen Recording (First 5 PCs on recorder)	1	$3,020.00	$3,020.00

CAROLINA RECORDING SYSTEMS

271076	Windows Screen Recording (5 additional PCs on recorder)	1	$600.00	$600.00
271083	8 pack MediaWorks DX (web) concurrent license	1	$1,090.00	$1,090.00
271077	Quality Assurance DX Software (Quality Factor): FIRST 20 Agents (Requires MediaWorks Plus/DX)	This will cover QA for Law and Fire 1	$3,020.00	$3,020.00
DX706-1SSD	SSD Option - Upgrade NexLog 740 DX-Series (at time of order) to 2x4TB HotSwap MegaRAID1=4TB storage	1	$6,435.00	$6,435.00

P25 Radio Integration

Product Details		Quantity	Unit Price	Ext. Price
115015	Initial license processing, handling and management per end user for P25 or TETRA; (Manadory - Non-Discountable)	1	$3,500.00	$3,500.00
209220	Integration to Motorola ASTRO 25 system - Initial ASTRO version - SINGLE AIS	1	$14,995.00	$14,995.00
271141	Mandatory license fee for Initial Astro System Release - for end-customer with ONE AIS (or FIRST AIS) (Non-Discountable; must be pre-paid)	1	$54,995.00	$54,995.00
324720-DX	DVSI 2-Port Decoder for NexLogDX (for P25, DMR, MOTOTRBO, NXDN) - Max 8	1	$3,000.00	$3,000.00

Peripherals

Product Details		Quantity	Unit Price	Ext. Price
NAS-S60T-A08	Network Attached Storage Server - 1U Rack-Mount with 8TB Hot Swap RAID Storage, Intel CPU, Windows Server 2022 Standard	1	$6,995.00	$6,995.00

Installation Services

Product Details		Quantity	Unit Price	Ext. Price
PROSVCS	Professional Services: Includes Pre-installation site survey, installation, configuration, testing, and unlimited training	1	$12,500.00	$12,500.00

Shipping

CAROLINA RECORDING SYSTEMS

PRODUCT DETAILS		QUANTITY	UNIT PRICE	EXT. PRICE
MAN S&H	Manufacturer Shipping and Handling	2	$250.00	$500.00

CAROLINA RECORDING SYSTEMS

QUOTE SUMMARY	AMOUNT
Eventide NexLog 740 DX	$57,355.00
P25 Radio Integration	$76,490.00
Peripherals	$6,995.00
Installation Services	$12,500.00
Shipping	$500.00
TOTAL:	**$152,340.00**

Taxes, shipping, handling, and other fees may apply.

Continuation of your existing CRS annual maintenance plan and renewals are required to honor quote pricing and to ensure uninterrupted support and services.

Optional items that are quoted may not be included in the Quote Summary Total. If Optional items are selected, the additional cost will be added to the total when not already applied.

We reserve the right to cancel orders.

Order Remittance: Contact your CRS Account Manager for processing.

ACCEPTANCE

CRS / Carolina Recording Systems, LLC

SIGNATURE	*Rodney Watson*
NAME	Rodney Watson
DATE	07/24/2025

Caldwell County Emergency Services

SIGNATURE	
NAME	Becky Price
DATE	07/24/2025

CAROLINA RECORDING SYSTEMS®

Caldwell County Emergency Services - New DX Solution

Quote # Q-00303
Version #:

PREPARED FOR:

Caldwell County Emergency Services

Becky Price
rrector@caldwellcountync.org

CAROLINA RECORDING SYSTEMS

08/07/2025

Becky Price
Caldwell County Emergency Services
2351 Morganton Boulevard Southwest
Lenoir, NC 28645

RE: Quote # Q-00303

Dear Becky Price,

Carolina Recording Systems (CRS) is thrilled to submit the enclosed proposal for Caldwell County Emergency Services. We have had the privilege of serving Caldwell County Emergency Services for many years, and we are grateful for the strong partnership we have built together.

As part of our commitment to delivering cutting-edge solutions and ensuring continued efficiency of your operations, we are excited to present a proposal for the refresh of your current logging recording system to the Eventide NexLog 740DX. Our goal is to enhance performance, increase reliability, and security while ensuring seamless integrations with your existing systems.

The dedicated CRS team is passionate about creating an unparalleled partnership with our customers and those they serve to ensure exceptional and focused service. We believe that this refresh will improve the performance of your operations and position Caldwell County Emergency Services for future growth.

Thank you for this opportunity. We value our partnership Caldwell County Emergency Services and remain dedicated to delivering exceptional service and innovative solutions.

Respectfully,

Rodney Watson

Rodney Watson
Sr. Account Manager
Carolina Recording Systems

Executive Summary

Carolina Recording Systems is a leading managed service provider of mission-critical communication recording systems based in Charlotte, North Carolina. Operating since 2001, we pride ourselves in supplying solutions designed specifically to exceed the needs and requirements of mission-critical communication centers. We currently support over 250 customers, including public safety communications, hospitals, colleges & universities, airports, utilities, transit, and manufacturing organizations.

The Carolina Recording Systems Difference

Carolina Recording Systems understands the importance of personal relationships, customer service and accessibility. As a trusted partner to Caldwell County Emergency Services, our team's sole focus is to provide unrivaled customer service and direct support with knowledgeable Customer Account Managers, experienced and manufacturer certified Recording System Specialists, and focused Project Management.



Dedicated Customer Service & Support

Caldwell County Emergency Services will have direct access to CRS Recording Systems Specialists that are strategically located for comprehensive on-site implementation, rapid response service, and personalized training. Our Recording Systems Support Specialists are available 24x7 to monitor system alerts, provide remote and on-site support and unlimited training. We specialize in implementing and supporting solutions to enhance performance and increase efficiency. Our focus is to deliver solutions that align with your goals by prioritizing open communication and collaboration to ensure the success of every project.

CAROLINA RECORDING SYSTEMS

EXPERIENCE

Proposed Solution

To fulfill the recording requirements of Caldwell County Emergency Services, we are proposing the Eventide NexLog DX mission-critical communications recording system. Eventide currently has over 6,000 recorders deployed around the world, providing mission critical recording to over 3,600 Emergency Communication Centers. Eventide's recording systems are designed, assembled, tested, and supported exclusively in the USA.

Eventide's NexLog DX mission-critical communications logging system reliably captures, stores, protects, reproduces, and helps you manage important interactions and critical data. NexLog logging systems have been designed to help you securely document and retrieve incidents, comply with regulations, and improve your facility's operations. Eventide's NexLog recorders are stable purpose- built Linux appliances with over 45 integrations with other systems and applications found in Emergency Communications Centers.

System Design and Specifications

The Eventide NexLog operates on the purpose-built Linux operating system configured with multiple levels of resilience, including dual hot-swap redundant power supplies, redundant hard disk drives, redundant network capability (via NIC bonding), and multiple choices for archive redundancy and network archiving to another NexLog recorder. Eventide's recording systems are designed, assembled, tested, and supported exclusively in the USA.

Configuration, playback, retrieval, and incident management are accessed via a secured web interface. The web-based application eliminates the need for software to install or updates to manage. The system can also be accessed over a VPN without the need to install additional software, creating a simplified PC deployment process.

A multi-tier security system controls user access based on role and channel assignments. Password policy options include complex enforcement, automatic aging, change reminders, expiration, and lock-out. System access can also be controlled by an SMB share or active directory. In addition, each user's access and actions are audited and available for review.

The proposed NexLog recorder is equipped with RAID Array Storage that combines multiple hard disks into a logical drive for redundancy and increased performance. In the event of a drive failure, the logical drive is not affected. Data integrity and recording functions are unaffected and redundancy is automatically restored once the failed component is replaced.

CAROLINA RECORDING SYSTEMS

STATEMENT OF WORK

CRS will complete the following steps for Caldwell County Emergency Services:

- Conduct an initial project kickoff and site walkthrough to assess installation environment and requirements and structure cabling details and requirements.
- Document critical technical details required to complete recorder configuration such as TCP/IP addresses, system hostname, NTP server, channel definition and requirements, etc.
- Complete NexLog DX system burn-in and staging to ensure no immediate component failure.
- If purchased, complete NAS system burn-in and staging to ensure no immediate component failure.
- Configure basic recording solution system parameters as a part of the system staging process for recorder(s).
- Transport the recording solution to the Caldwell County Emergency Services data center for onsite staging.
- Mount new 66 blocks and run new analog cabling.
- Rack and power the NexLog DX(s), and NAS if purchased, within respective data center locations.
- Configure advanced recording solution system parameters required for radio and phone integration for recorder(s).
- If purchased, install screen agents onto CAD systems for agent desktop recording for recorder(s).
- If purchased, configure add-on integrations for recorder.
- Conduct end user training for Caldwell County Emergency Services personnel.

In addition to completing the above steps as a part of the recording solution implementation, CRS will provide a dedicated project manager to ensure consistent project status communication and on-time, on budget project delivery.

Customer Responsibilities

- Provide access to facilities for the installation team.
- Ensure availability of necessary network connections.
- Coordinate with relevant personnel for integration purposes.
- Coordinate with required third party vendors to provide the proper inputs, identified and terminated,
- Ensure required third party licensing, installation, and integration work is completed by appropriate vendor.

CAROLINA RECORDING SYSTEMS

System Design

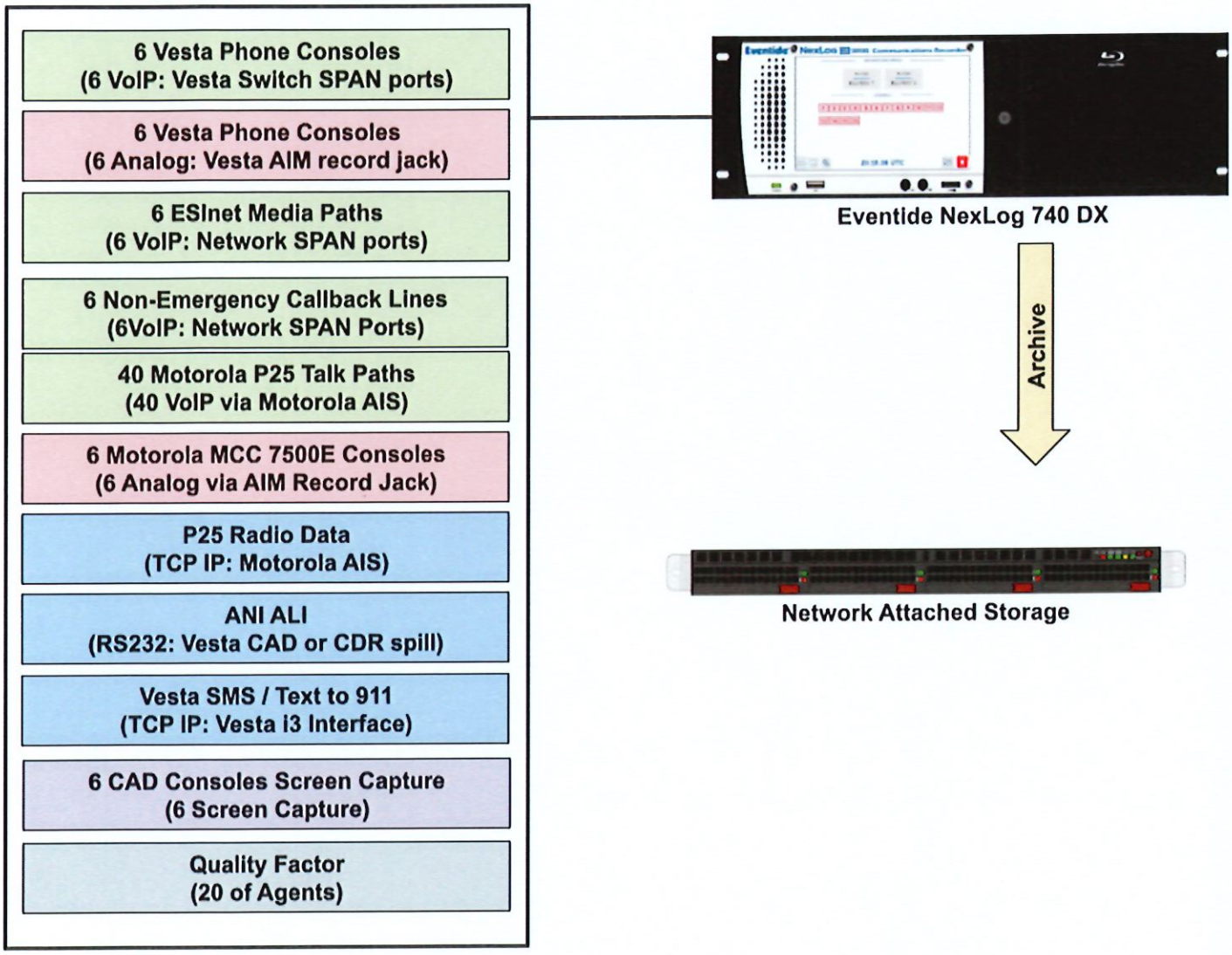

CAROLINA RECORDING SYSTEMS

Eventide®

LETTER OF CERTIFICATION

January 1, 2024

To: Whom it may concern:

Subject: Eventide Fully Certified Factory Trained Sales & Service Center

Eventide has certified **Carolina Recording Systems** as the only Premier Dealer and fully authorized Eventide **factory trained sales and service center** for the region covering North Carolina, South Carolina, West Virginia, Virginia, & District of Columbia. As such, superior sales support and after sales service support can be guaranteed.

Carolina Recording Systems is the **only company** in this region to receive this certification from Eventide.

Cordially,

Gordon Moore General Manager Eventide

Copy:
Byron Burns Owner
Carolina Recording Systems Ph: (704) 578-8025
Fax: (888) 776-0201
byron.burns@crsnc.com

EVENTIDE INC. • One Alsan Way • Little Ferry, NJ 07643-1001 • USA
☎201.641.1200 • fax 201.641.1640 • www.eventide.com • loggers@eventide.com

CAROLINA RECORDING SYSTEMS

Account Manager:	Ship To:	Bill To:	Quote #
Rodney Watson Sr. Account Manager (864) 619-9271 rodney.watson@crsnc.com	Becky Price rrector@caldwellcountync.org 2351 Morganton Boulevard Southwest Lenoir, NC 28645	Becky Price rrector@caldwellcountync.org 2351 Morganton Boulevard Southwest Lenoir, NC 28645	Q-00303 **Quote Date:** 08/07/2025 **Quote Expiration:** 09/30/2025

Eventide NexLog 740 DX

Product Details		Quantity	Unit Price	Ext. Price
NexLog740DX	NexLog 740 DX-Series base system: 3U rack-mountable, Core i5 CPU, 16GB DDR4 RAM, 2 x2TB fixed-Mount HDDs (RAID 1), 1 Blu-ray Multi-Drive, 2 Network Ports (100/1000), Embedded Linux, NexLog DX-Series software, web- based configuration manager, audio controls & amplified speaker on front panel, dual hot-swap 120-240VAC 50/60Hz power supplies and first year hardware warranty. Requires ongoing Eventide DX Software Update Subscription (DXSUS) for access to critical DX-Series Software & Security Updates.	1	$9,600.00	$9,600.00
DX701	Integrated 7" Color LCD Touch Screen Display for NexLog 740 DX-Series	1	$1,750.00	$1,750.00
DX730	Standard NexLog 740 DX-Seriess Archive: 1 Blu-ray Drive (also supports single-side DVD-RAM media)	1	$0.00	$0.00
324430-DX	Rack Mount Slides - 26" 4 Post, 3U (for NexLog 740DX)	1	$360.00	$360.00
109033-003	Quick Install Kit (9 ft. Cable + "66" Block):	1	$220.00	$220.00
271052	Internal IP Recorder with First 8 G.711 Channels	1	$4,200.00	$4,200.00
DX939	DX Series 8 Channel VoIP Add-On	7	$1,920.00	$13,440.00
DX755	Quad Port 100/1000 PCIe (PCI Express) Network Card (for NexLog 740 DX-Series recorder only)	1	$1,440.00	$1,440.00
DX912	Motorola VESTA NG911 Call Recording Bundle (Voice, Metadata and SMS)	1	$10,900.00	$10,900.00

271070	Windows Screen Recording (First 5 PCs on recorder)	1	$3,020.00	$3,020.00
271076	Windows Screen Recording (5 additional PCs on recorder)	1	$600.00	$600.00
271083	8 pack MediaWorks DX (web) concurrent license	1	$1,090.00	$1,090.00
271077	Quality Assurance DX Software (Quality Factor): FIRST 20 Agents (Requires MediaWorks Plus/DX)	1	$3,020.00	$3,020.00
271111	Eventide MP3 option for MediaWorks DX	1	$210.00	$210.00
DX706-1SSD	SSD Option - Upgrade NexLog 740 DX-Series (at time of order) to 2x4TB HotSwap MegaRAID1=4TB storage	1	$6,435.00	$6,435.00
DXANA16	16-Channel Analog PCIe (PCI Express) Card, 16 Ch. Licenses	1	$4,800.00	$4,800.00

P25 Radio Integration

Product Details		Quantity	Unit Price	Ext. Price
115015	Initial license processing, handling and management per end user for P25 or TETRA; (Manadory - Non-Discountable)	1	$3,500.00	$3,500.00
209220	Integration to Motorola ASTRO 25 system - Initial ASTRO version - SINGLE AIS	1	$14,995.00	$14,995.00
271141	Mandatory license fee for Initial Astro System Release - for end-customer with ONE AIS (or FIRST AIS) (Non-Discountable; must be pre-paid)	1	$54,995.00	$54,995.00
324720-DX	DVSI 2-Port Decoder for NexLogDX (for P25, DMR, MOTOTRBO, NXDN) - Max 8	1	$3,000.00	$3,000.00

Peripherals

Product Details		Quantity	Unit Price	Ext. Price

CAROLINA RECORDING SYSTEMS

NAS-S60T-A08	Network Attached Storage Server - 1U Rack-Mount with 8TB Hot Swap RAID Storage, Intel CPU, Windows Server 2022 Standard	1	$6,995.00	$6,995.00

INSTALLATION SERVICES

PRODUCT DETAILS		QUANTITY	UNIT PRICE	EXT. PRICE
PROSVCS	Professional Services: Includes Pre-installation site survey, installation, configuration, testing, and unlimited training	1	$12,500.00	$12,500.00

SHIPPING

PRODUCT DETAILS		QUANTITY	UNIT PRICE	EXT. PRICE
MAN S&H	Manufacturer Shipping and Handling	2	$250.00	$500.00

CAROLINA RECORDING SYSTEMS

QUOTE SUMMARY	AMOUNT
Eventide NexLog 740 DX	$69,955.00
P25 Radio Integration	$76,490.00
Peripherals	$6,995.00
Installation Services	$12,500.00
Shipping	$500.00
TOTAL:	**$157,570.00**

Taxes, shipping, handling, and other fees may apply.

Continuation of your existing CRS annual maintenance plan and renewals are required to honor quote pricing and to ensure uninterrupted support and services.

Optional items that are quoted may not be included in the Quote Summary Total. If Optional items are selected, the additional cost will be added to the total when not already applied.

We reserve the right to cancel orders.

Order Remittance: Contact your CRS Account Manager for processing.

ACCEPTANCE

CRS / Carolina Recording Systems, LLC

SIGNATURE	*Rodney Watson*
NAME	Rodney Watson
DATE	08/07/2025

Caldwell County Emergency Services

SIGNATURE	
NAME	Becky Price
DATE	08/07/2025

Board of Commissioners Meeting
Agenda Item Summary

MEETING DATE	DEPARTMENT	PREPARED BY
September 22, 2025	Sheriff's Office	

AGENDA ITEM # 8

Communications- Purchase of New Antenna for Communications Center

BACKGROUND

This transfer allows for the purchase of a new antenna for the communications center to replace one damaged in a lightening strike.

RECOMMENDED MOTION

Approve Transfer

BUDGET IMPACT

This uses funds already approved in the budget for the comm center but it needs board approval since it is a capital purchase.

APPROVED FOR BUDGET YEAR

No

ATTACHMENTS

1. Budget Revision- Antenna for Comm Center
2. Antenna Quote

Caldwell County, North Carolina

Budget Transfer # _____

Date Approved _____

BUDGET TRANSFER

The following Appropriation Transfer(s) is required:

Transfer From:			**Transfer To:**		
Line Item #	Title	Amount	Line Item #	Title	Amount
10.4603.435200	M&R Equipment	11,770.00	10.9000.451000.4603	Equipment	11,770.00
Total		**11,770.00**	Total		**11,770.00**

Explanation and Justification for the Budget Revision:

This budget transfer allows for the purchase of a new antenna for the comm center. It uses existing budget in the department but requires board approval because it's a capital purchase.

DEPARTMENT HEAD	8/12/2025	Finance Director	8/12/2025

MOBILE COMMUNICATIONS AMERICA, INC.
4800 REAGAN DR
CHARLOTTE, NC 28206
Phone: 704-597-5220
Fax:

QUOTATION

1089000017

Bill To:
Caldwell County NC Sheriffs Office
Attn Heather Watson Admn Asst
2351 Morganton Blvd SW
Lenoir, NC 28645-4973

Contact:
Contact #:

Ship To:
Caldwell County NC Communications
Attn Heather Watson
2351 Morganton Blvd SW
Lenoir, NC 28645-4973

Contact: BRANDY ELLIS
Contact #: 828-759-1544

Date: 08/12/2025	Customer #: 106271	Terms: NET 30 DAYS

Qty	Item	Description	U/M	Unit Price	Extended
300	458935	Sinclair Tech: 148-168 MHz 5dBd Omnidirectional	EA	3,815.00	3,815.00
400	321336	Clamp Assembly SC281/381 Single piece. Order two per Antenna. CLAMP006C	EA	545.00	1,090.00
500	SS-SUBCONTRACT	Tower Crew	EA	5,385.00	5,385.00
600	FT-FR	FIELD TECH LABOR FLAT RATE	EA	1,480.00	1,480.00

Accepted By: _____ **Date:** _____

Please contact customer representative by phone or email with any questions:
Customer Rep: Damien Grant
Phone #:
Email: damiengrant@callmc.com

Subtotal :	$11,770.00
Tax :	$794.48
Total Quote :	$12,564.48

Quote Valid for 30 Days.

Effective August 1, 2018, all credit card payments are subject to a 2% convenience fee

All orders are subject to the MCA Terms and Conditions attached hereto and incorporated by reference.

Order are also subject to partial shipment and partial invoice.

Tax calculations provided are estimates and are subject to change.

MOBILE COMMUNICATIONS AMERICA, INC. TERMS AND CONDITIONS

The following Terms and Conditions ("T&Cs"), together with the terms of the relevant Quote, and any other documents incorporated herein by reference, constitute the sole and entire agreement ("Agreement") between Mobile Communications America, Inc. a Delaware corporation ("MCA") and the Buyer whose name appears on the signature page of the Quote ("Buyer"; MCA and Buyer are referred to collectively as the "Parties" and each, individually, a "Party") with respect to the equipment and/or parts ("Goods") and/or services ("Services"; collectively, the "Work") to be provided by MCA to Buyer in the Quote, and supersede all prior or contemporaneous understandings, agreements, negotiations, representations and warranties, and communications, both written and oral. The quantity, quality and description of the Goods shall be as specified in an applicable Quote and/or any applicable specification agreed to in writing by the Parties. With respect to Services, any Quote is expressly subject to MCA's inspection of the site where the Services will be performed and its suitability for the Services in MCA's sole and absolute discretion.

By accepting a Quote, Goods or Services from MCA, Buyer's consent to this Agreement will be conclusively established regardless of the manner of acceptance. Buyer acknowledges and agrees to this Agreement and no other terms and conditions issued on Buyer's PO or other work/order form are incorporated or will apply unless agreed upon by both Parties in writing and signed by the Parties. This Agreement will prevail over any of Buyer's general terms and conditions of purchase regardless of whether or when Buyer has submitted its purchase order or such terms. Fulfillment of Buyer's order does not constitute acceptance of any of Buyer's terms and does not serve to modify or amend this Agreement. In the event of any conflict between these T&Cs and the Quote, these T&Cs shall govern, unless the Quote expressly states that the terms and conditions of the Quote shall control.

1. INDEPENDENT CONTRACTORS. Neither the transactions contemplated by the Agreement or any other document between the Parties are intended to constitute or create a joint venture, pooling arrangement, partnership, or formal business organization of any kind. The Parties shall act as independent contractors at all times and neither Party shall act as an agent for the other, and the employees of one Party shall not be deemed employees of the other Party.
2. SHORTAGES AND DEFECTS OF GOODS: Buyer will be deemed to have accepted the Goods unless MCA is notified in writing of the rejection of any unit of the Goods within three (3) days of receipt. Any claim of shortages or defects must be made within three (3) days of delivery to Buyer. Claims must be provided to MCA in writing and must detail for MCA the specific reason(s) for rejection. Buyer shall afford MCA prompt and reasonable opportunity to inspect all Goods against which any claim is made. Buyer shall not return any Goods to MCA without prior authorization. After MCA has reviewed the rejection notice and authorized the return, Buyer will return the rejected Goods to MCA (or MCA's designee) in the same condition as when it was received. All returns must be in the original container and packaging along with all accessories and instructions included must be shipped freight prepaid. Notwithstanding the foregoing, (a) in the event MCA reasonably determines that the basis for rejection relates to a matter covered by a Manufacturer Warranty, MCA shall have no liability under this Section other than to inform Buyer of such determination.
3. PRICING AND PAYMENT: Pricing for the Services or the Goods, or the manner or method by which such prices shall be set or finally determined, shall be set forth in the Quote. All quotations reflect U.S. Dollars. Buyer acknowledges that prices may fluctuate due to manufacturer costs, supply chain variances, tariffs or Force Majeure Events (hereinafter defined). As such, MCA reserves the right to adjust prices accordingly and/or cancel Quotes at any time. MCA will make reasonable effort to provide Buyer timely notice of such changes. The right to refuse to accept any Quotes for any reason is reserved by MCA even if a previous quotation has been made. All payments must be made in U.S. Dollars. Payment shall be due and payable no later than thirty (30) days from the date of invoice. If Buyer makes payment by check, the check must be drawn on a US bank. Payment shall not be deemed received by MCA for any purpose hereunder, including MCA's security interest in the Goods, until such time as MCA receives cleared available funds. Each Quote, assuming due fulfillment thereof, shall be considered a separate and independent transaction and payment therefor shall be made accordingly. Payment shall not be withheld on account of any claim by Buyer against MCA. Buyer shall not and acknowledges that it will have no right, under this Agreement or any other agreement, document, or law to withhold, offset or debit any amounts owed or due to MCA or any of its Affiliates against any other amount owed or due to MCA or any of its Affiliates under any other document or agreement. If Buyer disputes any portion of a MCA invoice, Buyer shall pay the undisputed portion when due and MCA and Buyer shall work in good faith to resolve the dispute as to the balance within thirty (30) days from notice of the disputed portion, at which point Buyer agrees to pay that portion whether an agreement has been reached or otherwise. Any invoiced amount which is not paid in accordance with this Agreement shall be considered overdue. Nonpayment or delay in payment by Buyer shall be considered a breach of the Agreement. If services, installation and/or shipments (as applicable to a particular Quote) are delayed by the Buyer, payments shall be due on the date when MCA is prepared to perform (or cause a third party to perform). Goods held for the Buyer shall be at the risk and expense of the Buyer. Goods shipped as exchanges will be invoiced for full value until the exchange is complete and Goods has been returned to MCA in good and working condition, at which point a credit for the full value will be given to Buyer. If the financial condition of the Buyer at any time does not, in MCA's sole and absolute discretion, justify continuance of performance or shipment on the terms of payment specified, MCA may require full or partial payment from the Buyer in advance. In the event of bankruptcy or insolvency of the Buyer, or in the event any proceedings are brought by or against the Buyer under any bankruptcy or insolvency laws, MCA shall be entitled to cancel any Quote then outstanding and shall receive reimbursement for any expenses incurred by it in connection with such cancellation and any applicable cancellation charges.
4. STANDARD TERMS WITHOUT CREDIT: If Buyer has not established preliminary credit with MCA, prepayment of the full amount of any invoice is required, unless such requirement is waived by MCA in its sole and absolute discretion.
5. STANDARD TERMS WITH CREDIT:
   a. Up to $50,000.00 – within Net thirty (30) days after date of invoice submitted by MCA.
   b. Over $50,000.00 may require the below milestone payments:
      - 40% down once a Quote is accepted by MCA
      - 50% once materials shipped for Buyer's use
      - 10% within thirty (30) days of the earlier of invoice or completion of installation, if applicable.
6. NON-STANDARD CREDIT TERMS: Negotiable prior to Quote acceptance.

7. NON-STANDARD PAYMENT TERMS: Non-standard payment terms which include cash payments and credit card payments by customers with credit terms with MCA, may be subject to convenience fees, in MCA's sole and absolute discretion.
8. LATE FEES: MCA shall be entitled, without prejudice to any of its other rights or remedies, after a seven (7) day grace period, to charge Buyer interest at the rate of 1.5% on any past due amount.
9. TAXES: The prices stated in any quote or Quote may not include any provision for sales, use, excise, or similar taxes. The amount of any and all such present or future taxes or other government charges applicable to the Services and, if applicable, the Goods will be added by MCA to the sales price and shall be paid by the Buyer, unless Buyer provides MCA with a tax-exemption certificate acceptable to the taxing authority. If MCA is required to pay or bear the burden of any excluded tax, the prices set forth herein shall be increased by the amount of such tax and any interest or penalty assessed, and Buyer shall pay to MCA the full payment of any such increase no later than ten (10) days after receipt of invoiced charges.
10. SECURITY INTEREST. Buyer grants to MCA a purchase money security interest in the Goods, including any software provided hereunder, and to the proceeds thereof until the full price and all other liabilities due to MCA are satisfied. Upon any default or breach by Buyer hereunder and to the extent applicable, MCA shall have all of the rights and remedies of a secured party under the Uniform Commercial Code or other applicable law, which rights shall be cumulative. Buyer hereby authorizes MCA to take any and all steps it determines are necessary to cause its security interest to be maintained and perfected, including, without limitation, the filing of any financing statements, and any amendments and/or renewals thereof. MCA shall have the right to enter Buyer's premises and repossess and remove any Goods if full payment has not been timely received by MCA.
11. DELIVERY: Unless otherwise specifically stated in an agreement signed by the Parties, delivery of all Goods shall be FOB MCA's shipping facility or at MCA's option, FOB point of manufacture. The Goods shall be delivered to the delivery address stated in the Quote. Shipping or delivery dates are best estimates only. in either case during the Buyer's usual business hours. MCA will arrange for ground shipment through a carrier of its choice unless a specific carrier has been mutually agreed upon in writing by both Buyer and MCA. All shipping charges will be prepaid by MCA and subsequently added to the Buyer's invoice. Title and risk of loss or damage shall pass to Buyer upon MCA's delivery of the goods to a common carrier or other delivery agency for shipment to Buyer. MCA assumes no liability in connection with shipment nor shall the carrier in any way be construed to be an agent of MCA. MCA shall not be liable for any damages or penalty for delay caused by transportation or failure to give notice of such delay. The Goods shall be marked in accordance with the Buyer's instructions and any applicable regulations or requirements of the carrier, if applicable, and properly packed and secured so as to reach their destination in an undamaged condition in the ordinary course. If MCA is unable to make deliveries as specified by Buyer, MCA shall notify Buyer immediately. Upon MCA's notification to the Buyer of delivery, or upon storing the Goods at the Buyer's request, the Buyer is deemed to have accepted the Goods, and thus, the ownership and all associated liabilities for the Goods. Upon delivery, any and all risks related to the possession, use, or maintenance of the Goods shall be borne solely by the Buyer. Insurance is the sole responsibility of the Buyer. MCA is not responsible for procuring insurance for the Goods, and the cost of any insurance coverage will not be included in the Product price unless explicitly requested by the Buyer at the time of Quote acceptance. Should the Buyer request MCA to insure the Goods, the associated costs will be added to Buyer's invoice. MCA reserves the right to make deliveries in installments and the contract shall be severable as to such installments. Delivery delay or default of any installment shall not relieve Buyer of its obligation to accept and pay for remaining deliveries.
12. INSPECTION: MCA shall take any steps necessary to comply with any reasonable request by the Buyer to inspect or test the Goods prior to installation. If as a result of inspection or testing the Buyer is not satisfied that such Goods will perform as anticipated per the written guidelines of the applicable manufacturer of any particular Goods (each, a "Manufacturer"), and if the Buyer so informs MCA within three (3) days of inspection or testing, MCA shall take commercially reasonable steps as are necessary to ensure compliance. Failure to so inform MCA within such three (3)-day period shall constitute Buyer's irrevocable waiver of its rights under this Section.
13. CANCELLATION. In the event of a cancellation by Buyer for any reason, Buyer will be responsible for payment to MCA for all Goods received, all non-cancelable goods on order with third-party suppliers, as well as Services provided up to the date of cancellation as follows:
    a. Goods: Buyer will pay the full price for all Goods that have been delivered and received, or which are in transit, whether to the project site or as Offsite Stored Materials, through the date that notice of cancellation is received by MCA. These Goods will be invoiced at the previously agreed-upon rates and payment will be made within 30 days of the date of invoice.
    b. Goods on Order and Non-Cancelable: Buyer will pay the full agreed upon price for all Goods that have been ordered specifically for the project and which cannot be canceled or returned for full reimbursement. This includes any custom-made items or materials that were procured for the project. These Goods will be invoiced at the previously agreed-upon rates and payment shall be made within 30 days of the date of invoice.
    c. Services Provided: Buyer will pay for all Services rendered by MCA up to the date notice of project cancellation is received by MCA. The Services will be invoiced at the previously agreed-upon rates and payment will be made within thirty (30) days from the date of the invoice. Services provided include but are not limited to consultation, design, installation labor, project management, subcontracted services and any other services outlined in the Agreement.
    d. Returnable or Cancelable Goods: May be returned at Buyer's expense and may be subject to restocking charges. Programmed Goods may be returned at MCA's discretion and will be subject to a reprogramming fee.
14. WARRANTY:
    a. MANUFACTURER'S WARRANTIES. Manufacturers of the Goods provide warranties, including, a software warranty and a license warranty, of varying periods and coverage (collectively, "Manufacturer Warranties"). Written copies of Manufacturer Warranties are available upon request. Buyer acknowledges and agrees that MCA shall have no obligation whatsoever in respect of Manufacturer Warranties and makes no warranty with respect to any goods or supplies supplied by any third party.
    b. LIMITED SERVICES WARRANTY. MCA warrants to Buyer that it shall perform the Services using personnel of required skill, experience, and qualifications and in a professional and workmanlike manner in accordance with generally recognized industry standards for similar services and shall devote adequate resources to meet its obligations under the Agreement ("Limited Services Warranty"). The Limited Services Warranty shall survive for a period of twelve (12) months following the date Services commences (the "Warranty Period"). The Limited Services Warranty is not assignable or transferrable to any third party (including any Affiliate of Buyer).
    c. WARRANTY DISCLAIMER. EXCEPT FOR THE LIMITED SERVICES WARRANTY, MCA MAKES NO WARRANTY WHATSOEVER WITH RESPECT TO SERVICES AND/OR ANY GOODS, INCLUDING ANY (A) WARRANTY OF MERCHANTABILITY; (B) WARRANTY OF FITNESS FOR A PARTICULAR PURPOSE; (C) WARRANTY OF TITLE; (D) WARRANTY AGAINST INFRINGEMENT OF INTELLECTUAL PROPERTY RIGHTS OF A THIRD PARTY; OR (E) OTHER WARRANTY WHETHER EXPRESS OR IMPLIED BY LAW, COURSE OF DEALING, COURSE OF PERFORMANCE, USAGE OF TRADE, OR OTHERWISE.

d. WARRANTY CONDITIONS. MCA shall not be liable for a breach of the Limited Services Warranty unless: (A) Buyer gives written notice of breach thereof, reasonably described, to MCA within twenty (20) days of the time when Buyer discovers or ought to have discovered the breach and such notice is given during the Warranty Period and (B) MCA reasonably verifies Buyer's claim that the Services was defective. MCA shall not be liable for a breach of the Limited Services Warranty if (I) Buyer makes any further use of such Goods after giving such notice; (ii) the defect arises because Buyer failed to follow MCA's oral or written instructions as to the storage, installation, commissioning, use or maintenance of the Goods; or (iii) Buyer alters or repairs such Goods without the prior written consent of MCA.

e. EXCLUSIVE REMEDIES. Subject to Buyer's compliance with the paragraph titled "Warranty Conditions" above, Buyer's sole and exclusive remedy for breach of the Limited Services Warranty shall be, in MCA's sole discretion, (i) to repair or re-perform the applicable Services or (ii) to credit or refund the price of such Services at the pro rata contract rate. SUCH REMEDY SHALL BE THE BUYER'S SOLE AND EXCLUSIVE REMEDY AND MCA'S ENTIRE LIABILITY FOR ANY BREACH OF THE LIMITED SERVICES WARRANTY.

15. AFFILIATES. MCA reserves the right, without prior notice to Buyer, to provide any Goods through, or cause any of its obligations under this Agreement to be performed by any of its Affiliates. In such case, the work shall be treated as a separate agreement between the Buyer and Affiliate, governed by the Agreement with the Affiliate taking the place of MCA for all purposes herein. Buyer is to make payment directly to the Affiliate for such Quotes. For the purposes of this Agreement, "Affiliate" shall mean, with respect to a Party, any entity which owns or controls, is owned or controlled by, or is under common ownership or control with, such Party. In addition, MCA may subcontract the Services to be provided to Buyer to a third party without Buyer's consent, provided that such subcontracting will not release MCA from any of its obligations under the Agreement.
16. FORCE MAJEURE: MCA shall not be responsible for any failure to perform due to causes beyond its reasonable control, such as, but not limited to, acts of God, flood, fire, earthquake, explosion, acts of the Buyer, acts of civil or military authority, war, invasion, hostilities (whether war is declared or not), terrorist threats or acts, riot or other civil unrest, embargoes or blockades, national or regional emergency, judicial action, pandemic, epidemic, default of subcontractors or vendors, labor disputes, accident, failure or delays on transportation, and inability to obtain necessary power, labor or materials (each, a "Force Majeure Event"). In the event of any delay due to such causes, or other difficulties, (whether or not similar in nature to any of those specified) the date of delivery shall be extended for a period equal to the time lost.
17. GOVERNMENT CONTRACTS: In the event that the Buyer's customer is the United States Government, the Services and, if applicable, Goods are purchased as Commercial Services or Commercial Goods, respectively, under the Federal Acquisition Regulation ("FAR"), and MCA will agree to comply with, if applicable, FAR 52.212-5 (Contract Terms and Conditions Required to Implement Statutes or Executive Quotes—Commercial Goods and Commercial Services). Any other Government flow downs shall be negotiated by the Parties and agreed upon between the Parties in writing prior to acceptance of a Quote by MCA.
18. FCC AND OTHER GOVERNMENT MATTERS: Although MCA may assist in the preparation of FCC License Applications as a courtesy, Buyer is solely responsible for obtaining any licenses dictated under the FCC's rules and regulations or required by any other Federal, State or Local government agency. Neither MCA nor any of its employees is an agent of the Buyer in FCC or other governmental matters.
19. NON-SOLICITATION. MCA expends considerable resources including money, time, training, etc. to properly train and educate its employees. MCA experiences considerable financial and other harm when its employees are recruited and hired by customers. Therefore, Buyer agrees to not recruit or solicit any MCA employee until and after such employee has terminated his employment with MCA for a period of at least one (1) year. In consideration of MCA performing its services under this Agreement, Buyer acknowledges MCA's damages in such event and agrees to pay as liquidated damages for breach of this Section a one-time payment equal to five hundred (500) times the then standard technician hourly billable rate, which is currently $200/hour.
20. PATENT, COPYRIGHT AND TRADEMARKS:
    a. COPYRIGHT AND MASK WORKS: Laws in the United States and other countries preserve for manufacturers certain exclusive rights, in the manufacturer's software incorporated into any Goods ("Manufacturer's Software") or included in Services, mask works and other works of authorship furnished hereunder, including, without limitation, the exclusive rights to prepare work derived from same, reproduce copies in same and distribute copies of same. Such Manufacturer's Software, mask works and other works of authorship may be used in, and redistributed with, only the Goods which incorporate the same. No other use, including without limitation, the reproduction, modification, or disassembly of such Manufacturer's Software, mask works and other works of authorship or exclusive rights in same is permitted.
    b. REVERSE ENGINEERING: Buyer acknowledges manufacturer's claim that the Manufacturer's Software and Goods furnished hereunder contain valuable trade secrets of manufacturer and therefore agrees that it will not translate, reverse engineer, decompile, or disassemble, or make any other unauthorized use of such Manufacturer's Software and Goods. Since unauthorized use of such Manufacturer's Software and Goods will greatly diminish the value of such trade secrets.
    c. LOGOS AND TRADEMARKS: Buyer shall not have a right to use any trademarks, names, slogans, or designations of MCA or any manufacturer of Goods incorporated into or included in any Goods and/Services.
21. MUTUAL WAIVER OF SUBROGATION. Customer and MCA waive all rights against each other for damages caused by any loss, to the extent those losses are covered and paid by insurance, and except such rights as they have to proceeds of such insurance. This waiver of subrogation shall be effective as to a person or entity (1) even though that person or entity would otherwise have a duty of indemnification, contractual or otherwise, (2) even though that person or entity did not pay the insurance premium directly or indirectly, or (3) whether or not the person or entity had an insurable interest in the damaged property. Except for damages covered and paid by insurance (for which the Parties have waived rights of subrogation, as outlined elsewhere in this agreement), the Parties agree that MCA's aggregate liability for all claims, suits, actions and proceedings, howsoever arising, directly or indirectly, under or relating to this agreement or its subject matter, including (but not limited to) those based on breach or rescission of contract or tort, shall not exceed, in the aggregate: (i) the fees paid by the Customer to MCA under this Agreement.
22. LIMITATIONS:
    a. LIMITATIONS OF MCA LIABILITY. IN NO EVENT SHALL MCA BE LIABLE TO BUYER OR ANY THIRD PARTY FOR ANY MATTER ARISING OUT OF OR RELATED TO THIS AGREEMENT IN RESPECT OF ANY LOSS OF USE, REVENUE OR PROFIT OR LOSS OF DATA OR DIMINUTION IN VALUE, OR FOR ANY CONSEQUENTIAL, INDIRECT, INCIDENTAL, SPECIAL, EXEMPLARY, OR PUNITIVE DAMAGES WHETHER ARISING OUT OF BREACH OF CONTRACT, TORT (INCLUDING NEGLIGENCE), OR OTHERWISE, REGARDLESS OF WHETHER SUCH DAMAGES WERE FORESEEABLE AND WHETHER OR NOT MCA HAS BEEN ADVISED OF THE POSSIBILITY OF SUCH DAMAGES, AND NOTWITHSTANDING THE FAILURE OF ANY AGREED OR OTHER REMEDY OF ITS ESSENTIAL PURPOSE. NO ACTION SHALL BE GROUGHT FOR ANY BREACH OF THIS CONTRACT MORE THAN ONE (1) YEAR AFTER THE ACCRUAL OF SUCH CAUSE OF ACTION EXCEPT FOR MONEY DUE UPON AN OPEN ACCOUNT. Both Parties agree that this waiver of consequential damages is a material inducement to enter into this Agreement.
    b. MAXIMUM LIABILITY. IN NO EVENT SHALL MCA'S AGGREGATE LIABILITY ARISING OUT OF OR RELATED TO THIS AGREEMENT, WHETHER ARISING OUT OF OR RELATED TO BREACH OF CONTRACT, TORT (INCLUDING NEGLIGENCE), OR OTHERWISE, EXCEED THE PURCHASE

PRICE OF THE PARTICULAR GOODS SOLD AND/OR SERVICES RENDERED HEREUNDER WITH RESPECT TO WHICH LOSSES OR DAMAGES ARE CLAIMED.

c. EXCLUSIONS. Notwithstanding the foregoing, the limitations of MCA's liability set forth herein shall not apply to (i) liability resulting from MCA's willful misconduct and (ii) death or bodily injury resulting exclusively from MCA's acts or omissions.

d. INSURANCE: It is further understood that MCA is not an insurer, and that Buyer shall obtain and maintain all necessary and appropriate policies of insurance in respect of its obligations under this Agreement. MCA does not represent or warrant, and MCA hereby expressly disclaims any responsibility for, that Goods will avert or prevent occurrences, or the consequences therefrom, which are monitored, detected, or controlled with the use of the Goods sold herein.

e. NO REPRESENTATIONS. MCA's representatives are only authorized to fill in the blanks on any agreement, sales Quote or quote form governed by this Agreement. The issuance of information, advice, approvals, instructions or cost projections by MCA sales or service personnel or other representatives shall be deemed expressions of personal opinion only and shall not affect MCA and Buyer's rights and obligations hereunder, unless that same is in writing and signed by an officer of MCA with the explicit statement that it constitutes an amendment to the Agreement.

23. INDEMNITY. MCA agrees to indemnify and hold harmless the Customer, including its officers, directors, and employees, from and against all losses, damages, expenses, and claims, up to the amount of the Quote, but only to the extent caused solely by the grossly negligent acts or omissions of MCA in the performance of Services. Buyer agrees to indemnify, defend, and hold harmless MCA, its officers, directors, and employees for any and all claims, including claims asserted by third parties, and against any and all liabilities, losses, damages, expenses, liens, claims, demands, actions, judgments, settlements, interest, awards, penalties, fines costs and expenses, including, without limitation, reasonable attorneys' fees, costs of collection, costs of recovering insurance, and costs of enforcing this indemnification provision for death, personal injury, or property damage arising out of any negligent act or omission of Buyer, except to the extent such claims are contributed to by (i) the negligence or willful misconduct of MCA. Any Party seeking indemnity hereunder agrees to (i) notify the other Party in writing of any claims as soon as reasonably practicable; (ii) allow the other Party to control the defense of any such claim and related settlement negotiations; and (iii) reasonably cooperate with the other Party in any defense actions.
24. GOVERNING LAW AND VENUE. This Agreement is governed by and construed in accordance with the laws of where the Project is located. In addition, the Parties hereto consent to the jurisdiction of any South Carolina state or federal court over any claims arising under or relating to this Agreement, or the relationship between them.
25. DISPUTES AND ATTORNEYS' FEES. The Parties shall attempt in good faith to resolve any disputes, controversy, or claim arising out of this Agreement by negotiation between the representatives of each Party who have the authority to settle the dispute. As a precondition to commencing litigation of any dispute which cannot be so resolved (other than the collection of money due on unpaid invoices), the Parties agree to participate in mediation with a mediator to be chosen by mutual agreement. If mediation is unsuccessful, any litigation shall take place in Spartanburg County South Carolina, United States of America, which shall be the exclusive forum for resolving the dispute, controversy, or claim. Each Party irrevocably and unconditionally waives any right to a trial by jury in respect to any legal action arising from this Agreement or any other agreement between the Parties. Should any dispute arise between the Parties regarding the interpretation, application, effect or enforcement of this Agreement, the prevailing party in any legal or arbitration proceedings commenced to resolve the dispute shall be entitled to costs and reasonable attorney's fees incurred in said legal proceeding.
26. ASSIGNMENT. This Agreement shall be binding upon and inure to the benefit of each Party and its respective heirs, successors, and assigns. The Buyer shall not assign in whole or in part these T&Cs or any interest therein or any rights hereunder without the written consent of MCA, which shall not be unreasonably withheld or delayed. Any such assignment without consent shall be void. Notwithstanding the foregoing, MCA may assign this Agreement or any other agreement between the Parties, without consent in whole or in part, for the purposes of corporate reconstruction, reorganization, or analogous proceeding, or to (a) any Affiliate; or (b) a third party in the event of a merger, recapitalization, conversion, consolidation, other business combination or sale of all or substantially all of the assets of MCA to such third party.
27. NOTICES. All notices or communications (other than normal business communications) required by this Agreement, or desired to be given hereunder, shall be in writing addressed indicated in the applicable signature block hereto, and given by electronic or USPS mail, with delivery confirmation, or an overnight mail service that confirms delivery and shall be deemed to be given when received.
28. NON-WAIVER: The failure of MCA to insist, in any one or more instances, upon the performance of any such term, covenant or conditions of this Agreement or to exercise any right herein, shall not be construed as a waiver or relinquishment of the future performance of any such term, covenant or condition or the future exercise of such right, but the obligation of the Buyer with respect to such future performance shall continue in full force and effect.
29. SEVERABILITY: If any provision or part-provision of this Agreement is or becomes invalid, illegal, or unenforceable, it shall be deemed modified to the minimum extent necessary to make it valid, legal and enforceable. If such modification is not possible, the relevant provision or part-provision shall be deemed deleted. Any modification to or deletion of a provision or part-provision under this clause shall not affect the validity and enforceability of the rest of this Agreement.
30. ENTIRE AGREEMENT. This Agreement, together with the Quotes and any Exhibits attached thereto, from time to time, sets forth the entire agreement and understanding between the Parties and supersedes all prior negotiations, agreements and understandings with respect thereto. No representations, statements, or inducements, oral or written, not contained herein shall bind either Party. This Agreement may only be amended by a written document duly executed between the Parties. No waiver, alteration or modification of the Agreement shall be binding on MCA unless in writing and signed by an authorized signor of MCA.

Board of Commissioners Meeting
Agenda Item Summary

MEETING DATE	DEPARTMENT	PREPARED BY
September 22, 2025	DSS	

AGENDA ITEM # 9

DSS- Foster Children Placement Funds

BACKGROUND

This budget revision allows DSS to spend additional state funds allocated to them for foster children placeent.

RECOMMENDED MOTION

Approve budget revision

BUDGET IMPACT

No budget impact, 100% state funded.

APPROVED FOR BUDGET YEAR

No

ATTACHMENTS

1. Budget Revision- DSS- Placement Funds
2. DSS Placement Funding Supporting Documents

Budget Revision # _____
Item No. _____
Board Action Date _____

Caldwell County Board of Commissioners

BUDGET REVISION

Board Meeting September 22, 2025

Subject:

Background and explanation for the Budget Revision:
To add funding to DSS budget based on state reallocating funds remaining from FY 25. The funds are to specifically assist DSS in meeting placement needs of eligible foster children. No county participation is required.

The Budget Ordinance is hereby amended by making a Supplemental Appropriation with appropriations and revenues being adjusted

SUPPLEMENTAL APPROPRIATION

Revenues: (Increase) / Decrease (Circle One)			Expenditures: (Increase) / Decrease (Circle One)		
Line Item #	Title	Amount	Line Item #	Title	Amount
105390 340612	Emergency Placement Fund	13,235.00	105390 443215	Emergency Placement Fund	13,235.00
Total		**13,235.00**	**Total**		**13,235.00**

Attachments (Yes or No):
Public Hearing (Yes or No):

Distribution:
Original - Finance Office
Duplicate - Clerk to the Board
Triplicate - Department Head

Staff Recommendation:

Board Action:

Department Head	Date	Finance Director	Date	County Manager	Date
KM	9/5/2025	9/5/25			

NC DEPARTMENT OF HEALTH AND HUMAN SERVICES

JOSH STEIN • Governor
DEVDUTTA SANGVAI • Secretary
LISA TUCKER CAULEY • Division Director, Human Services

September 4, 2025

DEAR COUNTY DIRECTORS OF SOCIAL SERVICES

ATTENTION: DIRECTORS, CHILD WELFARE PROGRAM MANAGERS, CHILD WELFARE SUPERVISORS AND FISCAL STAFF

SUBJECT: EMERGENCY PLACEMENT FUND

REQUIRED ACTION: ☐ Information Only ☐ Time Sensitive ☒ **Immediate**

The Division of Social Services (DSS) acknowledges the ongoing challenges in securing treatment placements for children in DSS custody with complex behavioral health needs. To help address this issue, NCDHHS DSS allocated a portion of the behavioral health investment from the 2023 Appropriations Act to the DSS Emergency Placement Fund.

At the end of SFY 2024–2025, $1,237,010 in unused Emergency Placement Funds remained and will be reallocated for SFY 2025–2026. To ensure sufficient funding for all counties, each county will receive a base amount of $10,000 and the remainder of the funds will be allocated based on each county's percentage of the foster care census. The allocated amounts are listed on the attached spreadsheet. If county expenditures exceed the county's allocation, any excess payments will be county funded.

Emergency Placement Funds are intended to temporarily assist county departments of social services in addressing identified placement needs for children in the custody of the agencies who are awaiting a Medicaid leveled treatment placement. While children await the location of the placement, these funds can be used to prevent them from staying in a DSS office.

Emergency Placement Funds are to be used to temporarily provide and arrange for essential needs of the individual to establish or maintain a placement. The youth must be opened for 109 Foster Care Case Management Services on a DSS-5027 or in the Child Welfare Information System in order for client specific costs to be claimed for purposes of use #2 or #3 below.

NC DSS has identified the following promising practices which can be supported with these funds:

1. Maintain a crisis placement through a contract that pays a retainer to an identified placement provider who will accept a temporary emergency placement until the appropriate behavioral health treatment placement is located.

2. Pay a short-term temporary enhanced rate to an identified placement provider who is currently or will provide care and supervision to youth who have behaviors that require an exceptional level of supervision. For children

who are awaiting a Medicaid leveled treatment placement, these funds can be used to pay a placement that will aid in meeting the child's immediate needs. The amount above the board rate will be reimbursed by submitting the DSS-1571 Part II.

3. Other local solutions that prevent a child in DSS custody from spending a night in the DSS office while waiting on the appropriate treatment placement as approved by NCDSS. The DSS Approved Alternative Option form must be emailed to emergency_placement_fund@dhhs.nc.gov. Determination will be made and emailed within 2 business days.

   Please note that requests for funding a placement in an unlicensed respite facility is not an approved use of funding, even if the county child welfare agency received court approval for placement in this setting.

The Emergency Placement Funds are available for use. No prior approval is needed by your agency to utilize this funding for purposes of use #1 or #2, only for option #3. Expenditures from all EPF options must be reported on the DSS-1571 Part II and counties should maintain documentation of costs claimed for audit purposes.

A Frequently Asked Questions document is available online here and will be updated as needed. Utilization of funds will be monitored, and your agency may be contacted to determine if allocated funds will be expended by May 31, 2026.

If you have questions or need additional information regarding Emergency Placement Funds, please send inquiries to emergency_placement_fund@dhhs.nc.gov.

Sincerely,

Adrian Daye
Deputy Director for Child Welfare Practice
Division of Social Services, Child Welfare
North Carolina Department of Health and Human Services

Cc: Lisa Tucker Cauley, Senior Director for Child and Family, and Adult Services
Donna Fayko, Deputy Director
Heather McAllister, Section Chief for Child and Family Services
Kathy Stone, Section Chief for Safety and Prevention Services
Kimaree Sanders, Section Chief for Regulatory and Licensing
Peter West, Section Chief for County Operations
William "Ben" Rose, Regional Director

CWS-63-2025

Emergency Placement Fund County Allocations

County	FY26 County Allocation
Alamance	12,548
Alexander	11,041
Alleghany	11,086
Anson	10,620
Ashe	10,820
Avery	10,421
Beaufort	12,460
Bertie	10,155
Bladen	11,662
Brunswick	13,213
Buncombe	16,382
Burke	14,277
Cabarrus	13,745
Caldwell	13,235

NC DEPARTMENT OF HEALTH AND HUMAN SERVICES • DIVISION OF SOCIAL SERVICES

LOCATION: 820 S. Boylan Avenue, McBryde Building, Raleigh, NC 27603
MAILING ADDRESS: 2401 Mail Service Center, Raleigh, NC 27699-2401
www.ncdhhs.gov • TEL: 919-527-6404 • FAX: 919-733-3052

AN EQUAL OPPORTUNITY / AFFIRMATIVE ACTION EMPLOYER

Camden	**10,022**
Carteret	**11,950**
Caswell	**10,532**
Catawba	**14,277**
Chatham	**11,728**
Cherokee	**10,620**
Chowan	**10,377**
Clay	**10,332**
Cleveland	**14,831**
Columbus	**11,839**
Craven	**12,305**
Cumberland	**25,068**
Currituck	**10,288**
Dare	**10,576**
Davidson	**15,296**
Davie	**11,041**

Duplin	**10,687**

Durham	**14,122**
Edgecombe	**11,086**
Forsyth	**14,919**
Franklin	**10,753**
Gaston	**17,733**
Gates	**10,000**
Graham	**10,931**
Granville	**10,576**
Greene	**10,598**
Guilford	**25,511**
Halifax	**10,731**
Harnett	**14,387**
Haywood	**12,836**
Henderson	**12,681**
Hertford	**10,155**
Hoke	**11,285**
Hyde	**10,111**

Iredell	**13,014**
Jackson	**11,573**
Johnston	**14,122**
Jones	**10,332**
Lee	**10,709**
Lenoir	**12,127**
Lincoln	**11,507**
Macon	**11,064**
Madison	**10,421**
Martin	**10,709**
McDowell	**12,282**
Mecklenburg	**18,974**
Mitchell	**10,510**
Montgomery	**10,465**
Moore	**11,352**
Nash	**11,928**

New Hanover	**14,254**

Northampton	**10,066**
Onslow	**12,305**
Orange	**11,684**
Pamlico	**10,377**
Pasquotank	**10,753**
Pender	**11,485**
Perquimans	**10,399**
Person	**11,551**
Pitt	**14,520**
Polk	**11,086**
Randolph	**13,235**
Richmond	**12,105**
Robeson	**18,487**
Rockingham	**13,634**
Rowan	**13,390**
Rutherford	**13,922**

Sampson	**12,305**

Scotland	**11,440**
Stanly	**11,640**
Stokes	**12,903**
Surry	**13,346**
Swain	**11,197**
Transylvania	**10,620**
Tyrell	**10,000**
Union	**13,457**
Vance	**11,972**
Wake	**21,656**
Warren	**10,111**
Washington	**10,620**
Watauga	**11,108**
Wayne	**12,216**
Wilkes	**14,188**
Wilson	**10,598**

Yadkin	**10,931**

Yancey	**10,510**

Board of Commissioners Meeting
Agenda Item Summary

MEETING DATE	DEPARTMENT	PREPARED BY
September 22, 2025	Health	

AGENDA ITEM # 10

Health Department- Generator Purchase

BACKGROUND

This budget transfer allows the Health Department to use funds from its existing budget to purchase a new generator for an EMS base.

RECOMMENDED MOTION

Approve Budget Revision

BUDGET IMPACT

Uses funds already approved in the base budget.

APPROVED FOR BUDGET YEAR

No

ATTACHMENTS

1. Health Dept Generator Purchase

Caldwell County, North Carolina

Budget Transfer # _____

Date Approved _____

BUDGET TRANSFER

The following Appropriation Transfer(s) is required:

Transfer From: Decrease		**Transfer To: Increase**	
Line Item # and Title	Amount	Line Item # and Title	Amount
10.5110.426000.10203	$ 57,975.00	10.5110.451000.10203	$ 57,975.00
Total	**57,975.00**	Total	**57,975.00**

Explanation and Justification for the Budget Revision: to cover expenses for new generator and switch for EMS bases using helene funding.

Dept. Head Approval	Date	Finance Director	
Anna Cook	8/18/25		8/19/25

Carolina Power Systems CAT

WE BUILD NC

122-Helene Funding

Quote No.: 31465495-C **Rev No.: C**
Project Name: Caldwell County – 125kW
Project Location: Lenoir, NC

Issue Date: 5/27/2025
Validity: 30 days
Sourcewell Contract# 092222-CAT

QTY	
1	**Diesel GENERATOR SET**
	Caterpillar Model C7.1GC – D125GC
	125 kW/156 kVA standby rating
	EPA Stationary Emergency
	120/208V, 3 phase, 4 wire, 60 Hz.
	UL 2200 certified
	IBC Certificate of Compliance
	Local generator control panel
	NFPA-99/110 Remote Annunciator
	Remote E-stop button
	105C rise alternator
	Main line circuit breaker: 600A, 3 pole, 100% LSI trip unit
	Charging alternator
	Battery set, rack, cables, and 10A battery charger
	Vibration isolators
	1000W jacket water heater
	GFCI outlets (20A)
	Factory test @ 0.8pf
	Sound attenuated enclosure – Caterpillar White
	Sound level at full load: 75 dBA at 23' (in free-field environment)
	100 MPH wind load design
	Internally mounted, super critical grade, exhaust system
	Externally mounted E-stop
	Interior LED lighting
	24-hour rated (400 gal.), subbase, double wall, UL-142 listed fuel tank
	High level, low level, and rupture basin alarms
	Fuel level gauge
	Normal & emergency vents
	5-gallon Spill containment & accessories
	5-Year Warranty

Generator Price: $50,405.00 (applicable taxes not included)

Adder for 48-hour Factory tank is $16,110.00 and would add 6 weeks to delivery time.

1	**AUTOMATIC TRANSFER SWITCH**
	600A, 208V, 3 phase, 4 wire, 60 Hz., 3 Pole
	Open transition
	NEMA 1 enclosure
	NON-Service entrance rated
	Modbus Comms/engine exerciser/300 entry event log/common alarm output function
	Relay expansion module
	2-Year Warranty

ATS Price: $7,570.00 (applicable taxes not included)

1	**GENERAL**
	Start-up, testing, and customer training
	Includes 4-hour Resistive load bank test on site *(need access within 50' of equipment with service truck)*
	F.O.B. Job Site for quoted equipment & material **(Off-loading and installation not included)**

1 **SERVICE/PM CONTRACT**

- **5-year** service contract includes: (performed during normal business hours)
  1 PM Service Annually
  3 PM Inspections Quarterly
  1 Fuel Sample Annually

PM Contract Price: $17,980.00 (applicable taxes not included)

1 **5-YEAR LOAD BANK TESTING**

- 2-Hour load bank test annually- (During Normal Business Hours)

Load Bank Testing Price: $6,985.00 (applicable taxes not included)

SUBMITTALS 2-5 WEEKS AFTER RECEIVING PURCHASE ORDER (subject to change depending on scope of project)

Estimated Shipment (from submittal approval):
Genset: 26-32 weeks (subject to change without notice)
ATS: 10-15 weeks (subject to change without notice)

Invoice & Payment Terms
Net due 30 days from invoice date
90% of total price invoiced upon equipment delivery
10% of total price invoiced upon completion of Carolina CAT's scope of supply

Exclusions and Clarifications:

-Fuel is not included in this proposal
-Stairs and/or access platforms are not included in this proposal
-No rental, loaner, or other temporary power generation equipment is included in this proposal
-Anchoring/installation/unloading of equipment/storage is not included in this proposal
-Not providing 3rd party, NETA, breaker, infrared, emissions, harmonics, transient, noise or megger testing onsite
-Not providing coordination study, arc flash study, or arc flash labeling
-Mechanical screening, fencing, or other security equipment is not included in this proposal
-No demolition of existing site conditions is included in this proposal
-Quote based on site visit dated 5/6/25. Should project scope change, Carolina Cat reserves the right to review and amend proposal.
-No specifications or drawings were issued for Bid on this project. Should they become available, Carolina Cat reserves the right to review and amend proposal.
-Generator size was based on customer request; no sizing calculations were performed by Carolina Cat.
*** Not quoting service entrance or NEMA 3 R rated ATS as there is a disconnect between transformer and ATS and the ATS is indoors.**

CAROLINA CAT
9000 Statesville Rd.
Charlotte, NC 28269

CAT Electric Power

Tim Angell
Cell (980) 257-1158
tangell@carolinacat.com

General Notes:

1. Quote is for equipment listed only.
2. WE HAVE DETAILED THE EQUIPMENT PROPOSED. PLEASE REVIEW YOUR SPECIFICATIONS TO BE SURE THAT THE EQUIPMENT DESCRIBED ABOVE MEETS YOUR REQUIREMENTS.
3. Startup quoted is for 2 weekdays and does not include weekend or afterhours work, if needed we will be happy to provide pricing for that labor.
4. This quotation covers items listed herein and does not constitute a specific job proposal.
5. All equipment furnished loose for installation by others unless specifically listed as installed.
6. We are quoting this equipment as a material supplier only, we do not include any offloading, installation, concrete pad, conduit, wiring, lugs, fuel, fuel piping, and other misc. hardware.
7. Start-Up, Testing, & Training to be performed during normal business hours unless specifically indicated otherwise.
8. Relay and/or System Coordination Study is not included unless specifically noted.
9. Telephone and verbal orders are to be confirmed in writing.
10. We reserve the right to correct errors or omissions.
11. Carolina Cat is not responsible for occurrences beyond our control.
12. Sale is contingent upon customer signing a Carolina CAT Purchaser Agreement Form.
13. This quotation is made subject to Carolina Tractor Standard Terms and Conditions.
12. This quotation is valid for Thirty (30) days from date of issue.
13. Contracts which include penalties or liquidated damage clauses for failure to meet promised shipping dates are not accepted by or binding on Carolina CAT, unless accepted, and confirmed in writing by an officer of Carolina Tractor & Equipment Company at its corporate office.
14. Delivery dates listed above are only estimates based on current delivery times from the manufacturers, they are subject to change at any time. Firm delivery dates can only be obtained after equipment has been released for production by the manufacturer. Release for production occurs after submittals have been approved in writing by the customer or the customer's representative.
15. Lack of urgent approval of submittals may require Carolina Cat to revise pricing if the manufacturer increases prices before order is released or if lead-times are revised to where an unquoted price increase will occur before shipment.

CONDITIONS OF SALE

1. **DEFINITIONS.** For purposes hereof, unless otherwise provided herein (i) "Company" means Carolina Tractor & Equipment Company, a North Carolina corporation; (ii) "Conditions of Sale" means the following conditions of sale which are hereby incorporated by reference in, and made a part of, the Sales Order Agreement to which these Conditions of Sale are affixed or attached; (iii) "Customer" means the individual or entity whose name appears on the face of the Sales Order Agreement; (iv) "Equipment" means the equipment and products described on the face of the Sales Order Agreement; (v) "Invoice" means any invoice sent by Company to Customer pursuant to a Sales Order Agreement; and (vi) "Sales Order Agreement" means Company's Sales Order Agreement, which is an agreement between Company and Customer.

2. **PAYMENT TERMS.** Customer shall pay to Company the amount listed on the face of the Sales Order Agreement or Invoice in the manner and in accordance with the terms provided on the face of the Sales Order Agreement or Invoice. If Customer fails to pay the amount listed on the Sales Order Agreement or Invoice as required, Company may, in its sole discretion, without prejudice to any other remedy, do any one or more of the following: (i) postpone shipments, (ii) alter payment terms, (iii) terminate shipments, and (iv) charge interest on all overdue amounts at the rate of 1.5% per month compounded monthly (or such lesser rate as is required by applicable law). Any and all taxes imposed by federal, state or other governmental authorities on the sale of the Equipment shall be paid by Customer in addition to the prices listed (and whether or not itemized) on the Sales Order Agreement or Invoice. Customer may not hold back, delay or set-off any amounts owed to Company in satisfaction of any claims asserted by Customer against Company.

3. **DELIVERY TERMS.** Unless otherwise stated on the face of the Sales Order Agreement, all delivery terms shall be Free on Board (F.O.B.) at the facility where the Equipment is manufactured, pursuant to which the risk of loss passes to Customer when the Equipment is put into the possession of a carrier. Company will use reasonable diligence to meet the scheduled delivery dates provided herein, which are estimates and not guarantees of when the Equipment will actually be delivered. Customer's acceptance of delivery shall constitute a waiver of any claim of damage for delay. All references to delivery and shipment terms are with reference to the applicable provisions of the Uniform Commercial Code in effect from time to time in the State of North Carolina.

4. **INSTALLATION.** Unless otherwise set forth on the face of the Sales Order Agreement, Company shall not provide (i) any offloading or installation services with respect to the Equipment, (ii) any equipment, consumables or other hardware required for the installation of the Equipment, including, without limitation, concrete pads, conduit, wiring, lugs, fuel or fuel piping or (iii) any relay or system coordination study.

5. **SECURITY INTEREST.** To secure the payment of the purchase price of the Equipment and all other amounts due to Company from Customer, Customer hereby grants to Company a purchase money security interest in the Equipment and in all equipment and goods hereafter sold by Company to Customer, all accounts resulting from the sale or other disposition thereof by Customer and in all instruments, documents, general intangibles, attachments and accessions related thereto and all proceeds of the foregoing, as such terms are defined in the Uniform Commercial Code in effect from time to time in the State of North Carolina. Customer hereby authorizes Company to file with the appropriate filing offices such UCC-1 financing statements and other instruments and documents as Company deems necessary to evidence and perfect the above-described security interest.

6. **TITLE.** Upon delivery of the Equipment to Customer's job site, the Equipment shall become the property of Customer, subject to a reservation of a security interest herein granted to Company, and any losses or damage thereto shall be borne by Customer. Customer shall obtain appropriate risk insurance for fire, theft and extended coverage including vandalism, which recognizes Company's interest.

7. **WARRANTY.** WARRANTIES WITH RESPECT TO ANY EQUIPMENT ARE MADE BY THE MANUFACTURER OF SUCH EQUIPMENT, AND, UPON REQUEST, COMPANY WILL PROVIDE A COPY OF THE APPLICABLE MANUFACTURER'S WARRANTY. COMPANY DOES NOT MAKE ANY EXPRESS OR IMPLIED WARRANTIES AS TO ANY MATTER WHATSOEVER, INCLUDING WITHOUT LIMITATION THE CONDITION OF ANY EQUIPMENT, ITS MERCHANTABILITY OR ITS FITNESS FOR ANY PARTICULAR PURPOSE, ALL OF WHICH ARE HEREBY EXPRESSLY DISCLAIMED.

8. **REMEDIES UPON BREACH.** If Customer breaches this contract, Company shall be entitled, in addition to any other remedy at law or equity, to recover all costs and expenses incurred by Company in connection herewith. Such costs and expenses shall include, without limitation, Company's reasonable attorney's fees, costs of labor applied to this contract, overhead, costs of any materials applied to or ordered for this contract, and any charges imposed on Company by its suppliers or subcontractors. If Company breaches this contract, Customer's exclusive remedy shall be to terminate this contract, after written notice to Company of the breach and reasonable time to cure, by written notice thereof to Company, and to receive a refund of the Sales Order Agreement amount, if previously paid, for any Equipment that have not been shipped or otherwise identified to this contract as of the date of such termination.

9. **CANCELLATIONS.** Cancellation of this contract must be in writing signed by Customer and Company. Such cancellation will be deemed to occur on the date that both parties sign the notice of cancellation. Upon such cancellation, Customer agrees to pay Company the greater of (i) thirty percent (30%) of the amount listed on the face of the Sales Order Agreement or Invoice or (ii) all costs and expenses incurred by Company in connection with this contract, including, without limitation, Company's reasonable attorney's fees, costs of labor applied to this contract, overhead, costs of any materials applied to or ordered for this contract, and any charges imposed upon Company by its suppliers or subcontractors.

10. **COSTS.** Customer shall pay all of Company's costs and expenses, including reasonable attorney's fees, of collecting any amount not paid when due hereunder and of otherwise enforcing the terms and conditions of this contract.

11. **EXCUSE FOR NON-PERFORMANCE.** Company shall not be liable for damages of any kind, caused by delays in shipment, delivery, or any other nonperformance of this contract, directly or indirectly resulting from or contributed to by any circumstances beyond Company's control, including without limitation, riots, wars, earthquakes or national emergencies, labor disputes of every kind however caused, embargoes, nondelivery by suppliers, inability to obtain supplies through normal sources of supplies, delays of carriers or postal authorities, or governmental restrictions, prohibitions or diversions. The occurrence of any such circumstance shall operate to extend Company's time of performance hereunder for a period not less than the period of such delay. In the event of any such circumstance, Company may allocate its production and deliveries among its customers as it may decide in its sole discretion.

12. **INSOLVENCY OF CUSTOMER.** Company may cancel this contract and suspend any further deliveries hereunder without any liability to Customer, and, if the Equipment has been delivered but not paid for, the price therefor shall become immediately due and payable despite any other agreement to the contrary, if: (i) any proceedings in bankruptcy, insolvency, receivership or liquidation are taken against Customer; (ii) Customer makes an assignment for the benefit of creditors or commits an act of bankruptcy or insolvency; (iii) Customer ceases, or threatens to cease, to carry on the ordinary course of its business, or transfers all or substantially all of its property; (iv) the Equipment is seized under any legal process or confiscated; or (v) Company in good faith believes that the ability of Customer to pay or perform any provision of this contract is impaired, or that the Equipment is in danger of being lost, or that any of the events mentioned above is about to occur.

13. **LIMITATION ON DAMAGES.** Company shall not be liable in tort, including liability in negligence or strict liability, and shall have no liability at all for injury to persons or property with respect to the Equipment or Company's performance hereunder. Company's contractual liability for failure to fulfill its obligations hereunder or any other liability in connection with the Equipment shall be limited to the amount of the purchase price of the Equipment. Even if Company has been advised of the possibility of the following, Company shall not be liable for any indirect, incidental, special or consequential damages, including lost profits and revenues, losses due to delay in shipment, failure to realize expected savings, any claim against customer by a third party, or any other commercial or economic losses of any kind.

14. **NOTICES.** All requests, instructions and notices from one party to the other must be in writing and may be given via mail or facsimile transmission to the address of the parties shown on the face of the Sales Order Agreement.

15. **GOVERNING LAW; VENUE.** This contract shall be governed by the laws of the state of North Carolina, without reference to its conflict of laws provisions. All disputes arising out of or in connection with this Agreement shall be brought and maintained in a state or federal court of competent jurisdiction located in Mecklenburg County, North Carolina.

16. **MISCELLANEOUS.** The terms and conditions stated herein constitute the complete and exclusive statement of the terms and conditions of the sale of the Equipment. There are no other promises, conditions, understandings, representations or warranties of any kind with respect to the subject matter hereof. This contract may be modified only by a writing referencing this contract signed by Company and Customer. The parties acknowledge and agree that any and all additional or different terms and conditions contained in any of Customer's acceptances, acknowledgments, invoices, bills or other commercial documents are hereby rejected by Company and shall not become part of the Conditions of Sale or limit, modify or otherwise affect the Sales Order Agreement. The failure of Company to enforce any right hereunder will not be construed as a waiver of its right to performance in the future. Any provision of this contract which is, or is deemed to be, unenforceable in any jurisdiction shall be severable from this contract in that jurisdiction without in any way invalidating the remaining provisions of this contract, and that unenforceability shall not make that provision unenforceable in any other jurisdiction. The rights which accrue to Company by virtue of this contract shall inure to the benefit of its successors and assigns.

17. **Taxes.** The pricing and information contained in the quote does not include any taxes that may be incurred by the party requesting the quote or CTE. This quote is not valid for capital improvement projects that the requestor submits NC Form 589CI. Advise your sales representative if any tax exemption forms will be provided.

18. **SURCHARGES.** In the event of an Original Equipment Manufacturer (OEM) price increase, Carolina Cat reserves the right to revise pricing or apply a Surcharge in direct correlation to the price increase received from the OEM.

ACCEPTED BY:_____ **P.O. #:**_____

COMPANY:_____ **DATE:**_____

Tim Angell
Electric Power Sales Engineer
Carolina Cat | Power Systems
Division 980-257-1158 (mobile)
tangell@carolinacat.com | www.carolinacat.com

Board of Commissioners Meeting
Agenda Item Summary

MEETING DATE	DEPARTMENT	PREPARED BY
September 22, 2025	Health	

AGENDA ITEM # 11

Health Department-WIC Funding Flow Through

BACKGROUND

This budget revision allows additional funds to flow through the Health Department for the WIC program.

RECOMMENDED MOTION

Approve Budget Revision

BUDGET IMPACT

100% flow thru funds, no local dollars.

APPROVED FOR BUDGET YEAR

No

ATTACHMENTS

1. Health WIC Funding Flow Through

Budget Revision # _____

Item No. _____

Board Action Date _____

Caldwell County Board of Commissioners

BUDGET REVISION

Board Meeting _____

Subject: 403 WIC

Background and explanation for the Budget Revision:

These funding increases, applicable from July 1, 2025 through May 31, 2026, will enhance the LHD's ability to continue with the objective of the Special Supplemental Nutrition Program for WIC, which is to provide supplemental nutritious foods, nutrition education, and referrals to health care for low-income persons during critical periods of growth and development.

The Budget Ordinance is hereby amended by making a Supplemental Appropriation with appropriations and revenues being adjusted

SUPPLEMENTAL APPROPRIATION

Revenues: Increase / Decrease (Circle One)			**Expenditures: Increase / Decrease (Circle One)**		
Line Item #	Title	Amount	Line Item #	Title	Amount
10.5167.331501	WIC	5,361.00	10.5167.412100	Salary	5,361.00
Total		**5,361.00**	**Total**		**5,361.00**

Attachments (Yes or No):

Public Hearing (Yes or No):

Distribution:
Original - Finance Office
Duplicate - Clerk to the Board
Triplicate - Department Head

Staff Recommendation:

Board Action:

Department Head	Date	Finance Director	Date	County Manager	Date
[signature]	9/3/25	[signature]	9/3/25		

Board of Commissioners Meeting

Agenda Item Summary

MEETING DATE	DEPARTMENT	PREPARED BY
September 22, 2025	Administration	

AGENDA ITEM # 12

Facilities Services- Mowing Contract

BACKGROUND

RECOMMENDED MOTION

BUDGET IMPACT

APPROVED FOR BUDGET YEAR

No

ATTACHMENTS

1. Mowing Contract Extension

Budget Revision # _____

Item No. _____

Date:_____

Caldwell County Board of Commissioners

BUDGET REVISION

Subject:

Background and explanation for the Budget Revision:

This budget revision appropriate additional funds for the mowing contract to cover keeping the vendor in place through September.

The Budget Ordinance is hereby amended by making a Supplemental Appropriation with appropriations and revenues being adjusted as follows:

SUPPLEMENTAL APPROPRIATION

Line Item #	Title	I/D	Amount	Line Item #	Title	I/D	Amount
10.9800.397000	Fund Balance App	I	$ 25,000.00	10.4260.435505	Mowing	I	$ 25,000.00
Total			**25,000.00**	**Total**			**25,000.00**

Attachments (Yes or No): No

Public Hearing (Yes or No):

Distribution:
Original - Finance Office
Duplicate - Clerk to the Board
Triplicate - Department Head

Staff Recommendation:

Board Action:

Department Head	Date	Finance Director	Date	County Manager	Date
		09/17/25			

Board of Commissioners Meeting
Agenda Item Summary

MEETING DATE	DEPARTMENT	PREPARED BY
September 22, 2025	Administration	

AGENDA ITEM # 13

Market Adjustment for Level 3 Building Inspector

BACKGROUND

RECOMMENDED MOTION

BUDGET IMPACT

APPROVED FOR BUDGET YEAR

No

ATTACHMENTS

None

Board of Commissioners Meeting
Agenda Item Summary

MEETING DATE	DEPARTMENT	PREPARED BY
September 22, 2025	Sheriff's Office	

AGENDA ITEM # 14

CCSO- Application Submission Request for NC Community Foundation Grant

BACKGROUND

The goal of this request for grant application is to assist in supporting a summer kids' camp that aims to provide a safe, educational, and enjoyable environment for children. The camp will offer a variety of activities, including arts and crafts, sports, and educational workshops, designed to foster creativity, teamwork, and personal growth.

RECOMMENDED MOTION

Approval to Submit application

BUDGET IMPACT

This grant application is in an effort to assist in providing money to host the summer kid's camp. If received, this will aid the Sheriff's Office budget for the camp which gets larger every year.

APPROVED FOR BUDGET YEAR

No

ATTACHMENTS

None

Board of Commissioners Meeting
Agenda Item Summary

MEETING DATE	DEPARTMENT	PREPARED BY
September 22, 2025	Sheriff's Office	

AGENDA ITEM # 15

CCSO- Application Submission Request for CSX grant

BACKGROUND

The Caldwell County Sheriff's Office, NC faces ongoing challenges in responding quickly and effectively to Search and Rescue (SAR) operations due to limited mobile storage and transport capabilities for essential equipment. This grant is written in hopes of purchasing two enclosed trailers that will address this need by providing dedicated, ready-to-deploy units for SAR teams. These trailers will securely house necessary gear such as ropes, medical supplies, communication tools, and other rescue equipment, ensuring it is organized and protected.

RECOMMENDED MOTION

Approval to apply.

BUDGET IMPACT

There will be no budget impact if the grant is not received. We will continue to search for funding to purchase these items without using county budget.

APPROVED FOR BUDGET YEAR

No

ATTACHMENTS

None

Board of Commissioners Meeting
Agenda Item Summary

MEETING DATE	DEPARTMENT	PREPARED BY
September 22, 2025	Sheriff's Office	

AGENDA ITEM # 16

CCSO- Application Submission Request for Norfolk Southern Grant

BACKGROUND

This was a second grant that was found for this project. Attempts are being made through multiple outlets to complete this project and receive funding for it.
The Caldwell County Sheriff's Office, NC faces ongoing challenges in responding quickly and effectively to Search and Rescue (SAR) operations due to limited mobile storage and transport capabilities for essential equipment. The application for this grant is to purchase two enclosed trailers that will address this need by providing dedicated, ready-to-deploy units for SAR teams. These trailers will securely house necessary gear such as ropes, medical supplies, communication tools, and other rescue equipment, ensuring it is organized and protected.

RECOMMENDED MOTION

Approval to Apply

BUDGET IMPACT

There will be no budget impact if the grant is not received. We will continue to search for funding to purchase these items without using county budget.

APPROVED FOR BUDGET YEAR

No

ATTACHMENTS

None

Board of Commissioners Meeting
Agenda Item Summary

MEETING DATE	DEPARTMENT	PREPARED BY
September 22, 2025	Sheriff's Office	

AGENDA ITEM # 17

CCSO- Application Submission Request for kNot Today Grant

BACKGROUND

We received approval to submit a grant after Letter of Intent was submitted. The 2025 kNot Today grant is for financial assistance to allow a sworn Forensic Examiner to attend two SANS Institute courses—recognized internationally as a leader in information security and digital forensics education. The selected SANS courses, **FOR500: Windows Forensic Analysis and FOR518: Mac and iOS Forensic Analysis and Incident Response**, provide the means to recover, analyze, and authenticate forensic data through intensive hands-on training that directly enhances the capabilities of our forensic staff in analyzing digital evidence, responding to child exploitation and trafficking cases, and supporting criminal prosecutions. The cost for a single SANS certification course is $11,461, exceeding the division’s entire budget allocation for training and the reason for finding other means of funding such as this grant.

RECOMMENDED MOTION

Recommended approval to submit

BUDGET IMPACT

There will be no budget impact on this grant. If funding is not received, he will not attend the training.

APPROVED FOR BUDGET YEAR

No

ATTACHMENTS

None

Board of Commissioners Meeting
Agenda Item Summary

MEETING DATE	DEPARTMENT	PREPARED BY
September 22, 2025	Economic Development	

AGENDA ITEM # 18

Economic Development - Building Reuse Grant Proposal for Project Clean Meds

BACKGROUND

Project Clean Meds represents a New Jersey Company planning to invest $7.2 million in Caldwell County. The Company plans to hire 71 full-time positions within the next two years with an average salary of $52,000. Caldwell County Economic Development respectfully requests acceptance of the EDPNC proposal and approval of the required matching funds for the Building Reuse Grant. The proposal is for a $500,000 grant, with matching funds totaling $25,000 (five percent), to be allocated from the Sales Tax Reinvestment Fund.

RECOMMENDED MOTION

I move to approve the proposal and Sales Tax expenditure as presented.

BUDGET IMPACT

None. Already appropriated in the 2025/2026 budget.

APPROVED FOR BUDGET YEAR

Yes

ATTACHMENTS

1. Project Clean Meds Proposal

PROPOSAL

Project Clean Meds

August 20, 2025

GOVERNOR
Josh Stein

SECRETARY
Lee Lilley

NORTH CAROLINA
DEPARTMENT of
COMMERCE

Thank you for the opportunity to respond to your request for a proposal regarding Project Clean Meds as you consider new company location – purchase/lease. Our team stands ready to provide personalized assistance to you and your client's team as you assess a site location in North Carolina.

No Legal Obligation
This proposal represents our intent to identify programs that are available in North Carolina that may benefit Brunswick Pharma LLC in its efforts to locate or expand here and create no binding legal or contractual obligation on the part of either party.

Financial Information Required
No company will be permitted to apply for any grants until the Department of Commerce is provided with acceptable financial statements from the grantee or a guarantor.

Documentation and Approvals Required
State incentives are contingent upon submission of all required documentation, staff review, fulfillment of eligibility requirements and terms and conditions of programs, availability of capacity or funds to make any award, and approval by responsible program administrators, committees or authorities.

The relevant statutory provisions and rules must be consulted for a full understanding of the terms and conditions of each program. Although various economic development entities may reference State incentive programs, only administrators directly responsible for such programs at the relevant State agencies or relevant committees or authorities can provide definitive terms or make binding awards.

Public Records Disclosure
Please note that materials submitted by companies are subject to public disclosure under North Carolina's public records law, unless they qualify for confidential treatment under North Carolina law. Any public announcement regarding this project will include the number of new jobs created, the total annual average wage, the amount of capital investment and the amount of the state incentive awarded. Financial statements submitted to the Department by a private company or individual seeking assistance from the Department are not public records as defined in N.C. Gen. Stat. § 143B-431(f).

Environmental Justice Considerations
Gov. Stein's Executive Order No. 292 directs a whole of government approach that listens to communities that are suffering from pollution and the effects of climate change, and takes action to help them become safer, healthier and more sustainable environments. To support this effort, the Department of Commerce encourages all businesses considering a location or expansion in the state to review the Environmental Justice Toolkit for Businesses which provides recommended practices for engaging with local communities throughout the site selection and environmental permitting processes and for continued environmental stewardship once a project is completed. Frequent, transparent engagement with the local community is an effective way to build trust and facilitate positive, informed interactions during economic development projects.

Proposal Valid for 60 Days
Given the fact that the funding associated with these programs is limited and cannot be reserved until a public award is made, this proposal is valid for the next 60 days.

PROJECT ASSUMPTIONS	
Project Activity	A distributor of pharmaceuticals, allopathic and homeopathic drugs
Permanent full-time jobs	71 jobs
	Yr. 1: 49, Yr. 2: 22.
Average annual wage	$52,743
Capital investment	$7,200,000
Real Property	$3,000,000
Personal Property	$4,200,000
County under consideration	Caldwell County
Jobs to be retained	0

County Tier Designations and County Average Wages

The Department of Commerce annually ranks the state's 100 counties based on economic well-being and assigns a tier designation to each. The 40 most distressed counties are designated at Tier 1, the next 40 are Tier 2 and the 20 least distressed counties are Tier 3. This tier system is incorporated into various state programs to encourage economic activity in the less prosperous areas of the state. Please see the tier designation map to determine the 2025 tier designation of each county in the state. In addition, the county average wage is also often a determining factor related to applicability of various incentive programs. Local incentives are estimated to be equal to required local match; NCCCS customized training is estimated to be $1,400 - $1,600 per eligible trainee.

Below please find an overview of the programs that we are proposing for this project.

The value of any particular incentive may vary as additional information concerning the project becomes available. This summary represents our intent to identify programs that are available in North Carolina that may benefit Brunswick Pharma LLC in its efforts to locate or expand here and creates no binding legal or contractual obligation on the part of either party.

Incentive Summary

STATE PROGRAMS	ESTIMATED VALUE
Discretionary Incentives	
Rural Division Building Reuse	$500,000
Workforce Incentives	
North Carolina Community College System's Customized Training Value	$99,400-$113,600
Work Opportunity Tax Credit (WOTC)	$91,200
Federal Bonding Program	$155,000
TOTAL	**$845,600 - $859,800**

Rural Building Reuse Grant

The Rural Building Reuse grant program provides grants, on a competitive basis, to local governments to assist with building improvements that will lead to the creation of new, full-time jobs.

Eligible projects in the Vacant Building Category include the renovation of buildings that have been vacant for at least three months prior to the application deadline, or the initial upfit of shell buildings that have never been occupied and are at least five years old. For vacant buildings, only renovations within the existing footprint are eligible.

Eligible projects in the Existing Business Category include the renovation of buildings occupied by a resident company for at least 12 months in a priority industry, primarily manufacturing or distribution. A “resident company” is defined in N.C.G.S §143B-472.127(a)(4) as a company that has paid unemployment taxes or income taxes, and whose principal place of business is in this state. Renovations within the existing footprint and connected additions are eligible.

Eligible applicants are units of local government located in Tier 1 and Tier 2 counties as defined in N.C.G.S. §143B-437.08, and rural census tracts in Tier 3 counties. A rural census tract is defined in N.C.G.S. §143B-472.127(a)(2) as an area having a population density of less than 500 people per square mile in accordance with the most recent decennial federal census.

In Tier 1 and Tier 2 counties, the program may offer grants of up to $12,500 per new, full-time job committed with a maximum grant award of up to $500,000. In Tier 3 counties, the program may offer grants of up to $5,000 per new, full-time job committed with a maximum grant award of up to $250,000. In all cases the grant award will never exceed one-half of the renovation/construction cost. The program requires a dollar-for-dollar cash match equivalent to the grant request amount. In addition, the local government is required to provide 5% a cash match that shall come from local resources and may not be derived from other State or federal grant funds.

Funding decisions are made by the Rural Infrastructure Authority (RIA) based upon the quantity and quality of jobs, as well as, the overall economic impact of the project. Expenses eligible for reimbursement may not be incurred prior to issuance of formal notice of the grant award by the RIA.

The program includes claw-back provisions requiring repayment of the grant if the jobs committed are not created and/or maintained for six consecutive months during the two-year grant period.

Funds for the program are appropriated by the N.C. General Assembly during a fiscal year (July 1 through June 30) and awards are subject to the availability of funds.

The upcoming application deadlines and Rural Infrastructure Authority meeting dates are as follows:

It is important to note that the projects cannot be awarded by the RIA until other State incentives (One NC and JDIG) are publicly announced by Commerce.

Application Deadline	Date of Award
January 9, 2025	**February 20, 2025**
February 24, 2025	April 17, 2025
April 28, 2025	**June 19, 2025**
June 19, 2025	August 21, 2025
August 21, 2025	**October 16, 2025**
October 23, 2025	December 4, 2025
January 8, 2026	**February 19, 2026**
February 26, 2026	April 16, 2026
April 23, 2026	**June 18, 2026**

North Carolina Community College System's Customized Training Program

Attracting and retaining a skilled and motivated workforce is crucial to any new or expanding company. No state has more experience assisting companies with this critical issue than North Carolina. The State pioneered free, customized job training for new and expanding businesses in 1958 and continues to provide the nation's most-recognized job training service. Helping businesses maintain their competitive edge is a primary role of the Customized Training Program offered through the state's 58 community colleges.

Enhancing the global competitiveness of North Carolina's companies requires:

- A strategic training solution that identifies knowledge, skills and abilities for specific jobs
- The design and development of a detailed customized training plan
- The instructional delivery to a world-class workforce

The Customized Training Program provides education, training, development of instructional materials, and supporting services at no cost to eligible companies. Eligibility is based on:

- Job growth
- Investment in new equipment, machinery and technologies
- Productivity enhancement
- And may cover both new and incumbent workforce.

Customized Training Program is known for its agility, flexibility and focus on the customer with training and services including:

- **Technical Skills Training** – Delivered by the local community college, this training gets to the hearts of needed technical expertise and may be connected to National and Industry-Specific Skills Standards/Certifications.
- **Technology Transfer** – When skills are specific to one industry and best delivered by internal company trainers, the Customized Training Program offers the flexibility to support a negotiated number of these training hours. Support can include a negotiated amount of travel expenses for trainers traveling from a location to North Carolina or for a core number of North Carolina employees to travel to another location to become trainers for other employees.
- **Original Equipment Manufacturer (OEM) Training** – This allows employees to be trained competent in the operation and maintenance of newly installed equipment.
- **Job Profiling** – Using a focus group from an existing location, skills needed for employee success will be identified and a customized Job Profile Report developed.
- **Skills Assessment** – Aligned with the National Career Readiness Certification, validated assessments may be delivered to measure skills critical to job performance success.
- **Job Fairs** – Job fairs and on-campus recruiting will provide excellent access to targeted talent pools and generate publicity to further enhance recruiting efforts.
- **Development of Customized Training Material** – Training information can be developed and offered in a variety of media including video and e-learning to facilitate employee learning.
- **Pre-Employment Training** – This "realistic job preview process" allows both candidate and company an opportunity to assess each other in a typical work environment and determine if there is a good match for a long-term relationship. Both understand that there is no guarantee of a job offer nor is there any obligation to accept a job offer.
- **Statewide Experts** – Highly skilled professionals in areas such as continuous improvement, interpersonal skill and leadership development, and safety are available statewide to meet training needs.

NC Job Ready Workforce Investment Grant / On-The-Job Training

On-the-Job Training (OJT) is an opportunity for qualifying businesses to be reimbursed for a portion of the wages paid to eligible new hires. The wage reimbursement serves as compensation for lost productivity during the time the new hires are being trained and becoming more proficient.

Local workforce development boards may apply to the Division of Workforce Solutions (DWS) within the NC Department of Commerce for NC Job Ready Workforce Investment Grants in conjunction with economic development projects. A grant of up to $50,000 per project can support OJT to assist companies that choose to locate or expand in North Carolina.

These grants will be in addition to the current OJT programs that local workforce development boards offer on a regular basis to eligible local employers through the NCWorks system.

Local workforce staff will work with the company to identify qualified applicants who are eligible for On-The-Job Training. Once the local workforce staff and the company develop training plans, the company will be reimbursed for 50 percent of the wages paid for up to a six (6) month period for each applicant, while they are in a training/orientation period with the company. The local workforce staff and the company may negotiate the training period, based on the skills needed; however, no training period may exceed six months.

The amount of potential OJT funding is based on 50 percent of the actual average salary (provided by the company), multiplied by the months of training and the number of projected workers to be hired. Because these federal funds have a limited period of availability, the use of these funds will begin with the official announcement date of the project in the State of North Carolina.

All eligible workers must be at least age 18; a U.S. citizen or eligible non-citizen; a North Carolina resident; and registered with Selective Service if a male born after 2/31/1959.

OJT services are not available for temporary or contract hires. Participants must receive wages, benefits, and working conditions that are equal to those provided to regular employees in similar types of positions. No funds can be provided to employers to be used to directly or indirectly assist, promote, or deter union organizing.

After the public announcement of the project, a Pre-Award Review will be conducted by the local workforce staff for verification purposes and will be documented jointly with the establishment as a prerequisite to OJT services and the timing within which they are available.

This value statement is not in addition to any proposals for similar services from the regional or local levels. Resource alignment would need to occur between multiple proposals around these types of services.

NC Job Ready Workforce Investment Grant / Incumbent Worker Training

Incumbent Worker Training (IWT) is designed to make a difference in your company's bottom line, whether your organization is creating jobs, investing in new machinery and equipment, or streamlining processes for efficiency. IWT resources may support a needs assessment, instructional design, development and delivery of training.

Local workforce development boards may apply to the Division of Workforce Solutions (DWS) within the NC Department of Commerce for NC Job Ready Workforce Investment Grants in conjunction with economic development projects. A grant of up to $50,000 per project can support IWT to assist companies that choose to locate or expand in North Carolina.

These grants will be in addition to the current IWT programs that local workforce development boards offer on a regular basis to eligible local employers through the NCWorks system.

The IWT grant helps offset the cost of training employees who have worked for the company consistently for six months or more. Training will improve the skills of employees and the company's competitiveness by promoting from within and allowing the employer to backfill opportunities for less skilled or experienced employees.

Incumbent Worker Training Grants cover the costs of the following training-related expenses:

- Instructional costs for training courses
- Classes for certification exams
- Online training
- Skills assessments related to requested training
- Textbooks and manuals
- Computer software for training purposes
- Instructor travel (if the training location is not within a reasonable distance of the company)

Employees who are eligible for IWT grants are those who are at least 18 years of age and a paid employee of the applicant business; meet the Fair Labor Standards Act (FLSA)* requirements for an employer-employee relationship; have worked with the eligible business consistently for six months or more; and are U.S. citizens, or non-citizens permitted to work in the U.S.

To be eligible to apply for IWT, a business must be a North Carolina for-profit or not-for-profit business that has been in operation in North Carolina for 12 months or more. The company must be current on all federal, state and local obligations, in an employer-employee relationship with at least five employees, and financially viable. Businesses in high growth and in-demand industry sectors, (including advanced manufacturing, health care, biotechnology and hospitality) are given priority for the IWT program.

Talent Identification and Selection

Through the services of the NC Department of Commerce's Division of Workforce Solutions and its NCWorks partners, comprised of workforce and economic development professionals, we pledge to create and deploy a seamless process to recruit, screen and train your new workforce. We commit to designating a Project Manager that will serve as the main, dedicated point of contact for the development, design and delivery of a comprehensive recruiting, screening and training strategy, developed jointly with the company, through the following in-kind services.

Talent Recruitment

The company can be provided with access to a network of recruiters, infrastructure and recruiting tools. The recruiters are experienced in the labor market and can leverage resources to more efficiently and effectively identify qualified applicants.

To tap into the market, a range of recruitment tools can be used to assist talent acquisition for this project:

- A thorough analysis of the regional demographics to identify potential candidates.
- A coordinated communications and outreach strategy to raise awareness about job opportunities.
- A number of short orientation sessions for potential applicants to explain the process for securing a job with the company.
- Online job postings through NCWorks.gov and other Internet access points, social media, and post-secondary placement offices. A web link can direct interested candidates to a dedicated company website should one be in place.
- Dedicated personnel to coordinate recruiting efforts on local, regional and state levels.
- Special events such as job fairs, on-site and on-campus recruiting will provide excellent access to targeted talent pools and generate publicity to further enhance recruiting efforts.
- Other services for those moving to the state/region and on-going talent sourcing support.

These efforts can leverage the resources of the entire system of economic and workforce development agencies, providing the company with the foundation and support to build a thriving business for years to come.

Talent Screening

Utilizing the screening services available can trim considerable time and resources allocated to the staffing process.

Services provided for screening include:

- Using job and skills requirements developed by the company, NCWorks professional employment consultants will screen applicants, ensuring that only qualified candidates will be referred and the company talks only to those who meet the company's qualifications.
- NCWorks career center recruiting staff can design the interviewing process for candidates, based on the defined needs of the company. Experienced employment consultants can be available to support the interviewing process as needed.
- Recruitment specialists to manage applicant flow at NCWorks career centers and/or through web-based screening including candidate questionnaires, telephone screening and in-person interviews.
- Facilities and office equipment for company officials to conduct job fairs, group orientations, and applicant interviews.
- Experienced staff to provide information and a variety of appropriate recommendations regarding test selection and implementation such as, but not limited to: employment testing issues, test locators, achievement or aptitude tests.

Talent Assessment and Training

Through the NCWorks approved training providers, including the North Carolina Community College System's (NCCCS) Customized Training Program, training will be provided to eligible employees of the company utilizing the following steps:

- A comprehensive training plan, specific to the company's requirements, will be developed as a joint effort between representatives from the company and the NCWorks career center professionals and partners.
- Pre-Employment training can be utilized to minimize the amount of training that takes place after a candidate is hired and can include a realistic job preview to provide both the candidate and the company an opportunity to assess each other and determine if there is a good match for a long-term relationship.

On-Going Partnership
The NCWorks workforce partners are committed to working with the company and its Human Resources team as it establishes itself through ongoing support in building its workforce and long-term talent pipeline. This relationship will be a continuous foundation for assisting the company in identifying talent development resources. NCWorks partners can also provide funding for future training of the company's existing workforce as it continues to thrive in North Carolina.

Work Opportunity Tax Credit

Federal Work Opportunity Tax Credits (WOTC) are available to employers who hire individuals from eligible target groups with significant barriers to employment. The Division of Workforce Solutions (DWS) administers the WOTC program and determines eligibility for the target groups. The amount of tax credit employers can claim depends on the target group of the individual hired, the wages paid to that individual in the first year of employment, and the number of hours that individual worked. A business can receive anywhere from $1,200 to $9,600 for each one of its eligible employees.

Target Groups

Qualified IV-A recipient: An individual who is receiving Temporary Assistance to Needy Families (TANF) for any 9 months during the 18-month period ending on the hiring date.

Veteran: To be considered a veteran, an applicant must: 1) have served on active duty in the U.S Armed Forces for a period of more than 180 days, or have discharged or released from active duty for a service-connected disability, and 2) not have a period of active duty (not including training) of more than 90 days that ended during the 60-day period ending on the hiring date.

Qualified Veteran Categories:

- Veteran/SNAP: Received Supplemental Nutrition Assistance Program (SNAP) benefits for at least a 3-month period during the 15-months ending on the hire date.
- Unemployed Veteran/4 weeks: Unemployed for a period or periods totaling at least 4 weeks in the 1-year period ending on the hiring date.
- Unemployed Veteran/ 6 Months: Unemployed for a period or periods totaling at least 6 months in the 1-year period ending on the hiring date.
- Disabled Veteran: Entitled to compensation for a service-connected disability and is hired not more than 1 year after being discharged or released from active duty.
- Disabled Unemployed Veteran: Entitled to compensation for a service-connected disability and was unemployed for a period or periods totaling at least 6 months in the 1-year period ending on the hiring date.

Qualified Ex-Felon: An individual who has been convicted of a felony under any federal or state law, and is hired not more than 1 year after the conviction or release from prison for that felony.

Vocational Rehabilitation Referral: An individual who has a physical or mental disability resulting in a substantial handicap to employment and who was referred to the employer upon completion of (or while receiving) rehabilitation services by a rehabilitation agency approved by the state, an employment network under the Ticket to Work program, or the Department of Veterans Affairs.

SNAP Recipient: An individual who is 18-39 years old on the hiring date and received SNAP benefits for the 6-month period ending on the hiring date; or is no longer eligible for SNAP, but the family received SNAP benefits for at least 3 months of the 5-month period ending on the hiring date.

SSI Recipient: An individual who is receiving Supplemental Security Income (SSI) benefits for any month ending during the 60-day period ending on the hiring date.

Long-Term Family Assistance Recipient: An individual who received TANF payments for at least 18 consecutive months ending on the hiring date; or received TANF payments for any 18 months after August 5, 1997, and the earliest 18-month period beginning after August 5, 1997, ended during the past 2 years; or stopped being eligible for TANF payments because federal or state law limits the maximum period such assistance is payable and the individual is hired not more than 2 years after such eligibility ended.

Qualified, Long-Term Unemployment Recipient: An individual in a period of unemployment that is not less than 27 consecutive weeks and includes a period in which the individual received unemployment compensation under state or federal law.

Federal Bonding Program

The mission of the U.S. Department of Labor's Federal Bonding Program (FBP) is to give employers peace of mind by bonding job candidates considered to be higher risk. Individual fidelity bonds are provided free of charge and carry a $0 deductible to encourage employers to hire "at risk" individuals, who traditionally have had difficulty finding employment.

The FBP is designed to reimburse the employer for any loss due to employee theft of money or property up to $5,000 during the first six (6) months of a bonded individual's employment. Higher amounts can be requested based on business necessity. The FBP does not cover liability due to poor workmanship, job injuries or work-related accidents.

Eligible individuals include:

- Individuals with a history of arrest or conviction.
- Individuals with a history of substance abuse.
- Receive TANF (Temporary Assistance to Needy Families).
- Have poor credit or have previously declared bankruptcy.
- Are economically disadvantaged or with little or no work history.
- Have been dishonorable discharged from the military.

While it must be the employer who establishes the bond, job seekers can request a Federal Bonding Eligibility Letter from the Federal Bonding Coordinator or their NCWorks Career Center for use when applying for employment.

DocuSign Envelope ID: 286538D6-4CFB-4835-B283-12651F6270D1

NC DEPARTMENT of COMMERCE
WORKFORCE SOLUTIONS

Roy Cooper
GOVERNOR

Machelle Baker Sanders
SECRETARY

Chet Mottershead
ASSISTANT SECRETARY

April 10, 2024

Bill Slagle
Economic Development Partnership of North Carolina
Wells Fargo Capital Center
150 Fayetteville Street, Suite 1200
Raleigh, North Carolina 27601

Dear Mr. Slagle,

The North Carolina Department of Commerce Division of Workforce Solutions (DWS) is pleased to learn that Project Clean Meds is considering locating its manufacturing facility in Caldwell County, North Carolina. We understand the company is planning to create 125 new jobs by the year 2028. These new positions will have an average annual salary of $52,283 and the capital investment is estimated to exceed $6,998,000.

Supporting North Carolina's workforce is a priority of the state. As a key part of North Carolina's workforce system, NCWorks, DWS, and local workforce area boards and staff have extensive experience convening industry leaders, partners, and stakeholders to positively impact North Carolina's workforce community.

We understand a skilled workforce is essential to growing our economy and attracting more jobs to the State. North Carolina supports workforce development through a variety of programs and investments that benefit workers, employers, and communities. These programs focus on recruitment, hiring and screening, training and education, pipeline development, and transition services. A recruitment, hiring, and training plan will be developed jointly with the business, Commerce DWS, the local workforce area partners, and the NCWorks Career Centers.

We look forward to partnering with Project Clean Meds to develop a plan that meets your workforce needs. In addition, you can take advantage of the following workforce programs:

- **Work Opportunity Tax Credit:** Federal tax credit available to employers for hiring individuals from certain target groups who have consistently faced significant barriers to employment. ***Estimated potential value to employer: $91,200.***
- **Federal Bonding:** Issues fidelity bonds, which are business insurance policies that protect employers in case of theft, forgery, larceny, or embezzlement of money or property by an employee who is covered by the bond. The bond coverage is usually $5,000 with no deductible amount of liability for the employer. ***Estimated potential value to employer: $155,000.***
- **Additional State and Local Resources:** North Carolina's workforce development system is made up of a network of partners on the state and local levels. There are additional resources that may be available to your company, per eligibility qualifications, that support hiring and training of employees such as apprenticeships, customized training, work experience, and incumbent worker

DocuSign Envelope ID: 286538D6-4CFB-4835-B283-12651F6270D1

training. As you proceed with your project, your state workforce recruitment coordinator can share more about utilizing these programs and resources and connect you with partner organizations.

The workforce partners are committed to working with Project Clean Meds as it establishes itself in building its workforce pipeline. They will be a continuous resource for assisting the company in identifying talent development resources for future training of the company's workforce as it continues to thrive in North Carolina.

Should you have additional questions, please feel free to contact me at (919) 935-7228.

Regards,

DocuSigned by:
Andrea L. DeSantis
1C3ECB0AC995464...

Andrea L. DeSantis, Ph.D.
Assistant Secretary

cc: D. Jordan Whichard IV, Chief Deputy Secretary
Susan Fleetwood, Chief Economic Development Liaison
Jenni Harris, Executive Director of Business Services

NC COMMUNITY COLLEGES
CREATING SUCCESS

North Carolina Community College System
Dr. Jeff A. Cox
President
200 W. Jones St., Raleigh NC 27603

April 10, 2024

Mr. Bill Slagle
Economic Development Partnership of North Carolina
150 Fayetteville Street, Suite 1200
Raleigh, NC 27601

Dear Bill,

I am excited to learn that Project Clean Meds is considering expanding their company's manufacturing operation in Caldwell County, North Carolina. As I understand this project, the company is considering hiring 125 full-time positions within a five-year period. The average annual salary of all new hires is estimated to be $52,283 and the capital investment is estimated to exceed $6.9 million.

I am confident that given our extensive experience partnering with thousands of companies, both domestic and international, along with our resources and flexibility, that no other state offers accessibility to high quality workforce development as does North Carolina. The North Carolina Community College System is known worldwide for the quality and specific focus of our Customized Training Program and other programs that support business development in North Carolina.

Training may include pre-employment training, where candidates experience a short-term realistic job preview, as well as extensive post-employment training that will be customized for Project Clean Meds. A training plan is developed as a joint effort between representatives from the company, the local community college and the North Carolina Community College System. We are prepared to discuss technical training and soft skills training with your client. We look forward to partnering with Project Clean Meds to design and develop a customized plan to meet their specific workforce development requirements for a well-trained and productive workforce that is the equal of any in the world. Serving Project Clean Meds will be Caldwell Community College & Technical Institute, a leader in workforce development.

Although it is difficult to determine a dollar value of the training without knowing specific job skills and competencies, I estimate the value of our Customized Training Program support to be between $1,400 and $1,600 per eligible trainee. It should be noted this estimated value is not a grant award; but, as stated above, the estimate represents the value of a comprehensive training plan. This does not include fixed costs of existing personnel resources, previous investments in curriculum development, facilities, etc. I also need to mention that this commitment is contingent upon availability of funding, which is based on annual legislative appropriations. However, no other state has as long a period of consistent funding for customized training as has North Carolina.

Mailing Address: 5001 Mail Service Center | Raleigh, NC 27699-5001
Street Address: 200 West Jones | Raleigh, NC 27603
nccommunitycolleges.edu | Phone: 919-807-7100 | Fax: 919-807-7173

During the past year, we have worked with over 944 new, expanding, and existing industry clients across North Carolina to design and deliver focused and effective training programs that met their respective needs. Each year well over 96 percent of our clients ranked us as very good or excellent for meeting their training expectations, providing effective service, and for the impact of our training programs on their companies' productivity and performance. This year promises to be even busier and we hope to be able to start planning and implementing some of these activities for Project Clean Meds.

We are confident our Customized Training Program and the North Carolina Community College System have the fiscal resources and the expertise to provide assistance in developing a comprehensive and genuinely effective customized training program tailored to company needs.

Please know we are committed to a continued partnership with the company and the possibility of future expansion. If you have questions or need clarification on any of this information, please feel free to contact me at (919) 703-5359 or email me at loyackj@nccommunitycolleges.edu at your convenience.

Sincerely,

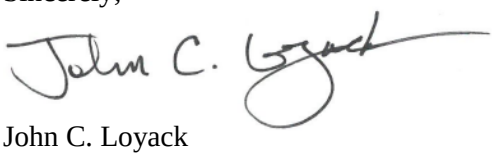

John C. Loyack
Vice President, Economic Development

JL/jmf

Board of Commissioners Meeting
Agenda Item Summary

MEETING DATE	DEPARTMENT	PREPARED BY
September 22, 2025	Administration	

AGENDA ITEM # 19

Ratify Proclamation for 250th Anniversary of Littlejohn United Methodist

BACKGROUND

RECOMMENDED MOTION

BUDGET IMPACT

APPROVED FOR BUDGET YEAR

No

ATTACHMENTS

1. Proclamation Littlejohn United Methodist

PROCLAMATION

06-2025

CELEBRATING THE 250th ANNIVERSARY OF
LITTLEJOHN UNITED METHODIST CHURCH, LENOIR, NC

WHEREAS, Littlejohn United Methodist Church, originally began between 1770 and 1775 as the Littlejohn Meeting House, a small one-room log house which was erected in the far east section of the cemetery, and

WHEREAS, earliest land grants of Rowan County, where this area of North Carolina was originally situated, was owned and gifted by Eli Littlejohn, whose brother, Rev. Abram Littlejohn was one of its earliest acting ministers, and

WHEREAS, early Methodist believers, along with those of the Baptist and Lutheran faiths, worshipped in the Littlejohn Meeting House, likely meeting on different days of the week and month, held one united theme or goal ~ that of spreading God's Word into the rural areas of Western North Carolina, and

WHEREAS, the Baptist and Lutheran believers separated from the Littlejohn Meeting House between 1778 and 1785 to establish their own meeting houses or churches, and

WHEREAS, Methodist Bishop Francis Asbury and countless dedicated circuit riders and ministers dedicated themselves to growing their congregation in the rural foothills of Burke County, which subsequently became Caldwell County, and

WHEREAS, Littlejohn United Methodist has maintained its mission to learn, experience, and be the love of Christ in this community and around the world, and

WHEREAS, Littlejohn United Methodist has continuously ministered unto the Lord and this community for these past 250 years.

NOW, THEREFORE, BE IT PROCLAIMED, the Caldwell County Board of Commissioners recognize August 24, 2025, as a day to celebrate 250 years of faith, unity, and God's blessing on Littlejohn United Methodist Church.

Adopted this the 22 day of September 2025.

Randy T. Church, Chairman

Attest: Abigail L. Rich

Abby Rich, NCCCC, County Clerk

Board of Commissioners Meeting
Agenda Item Summary

MEETING DATE	DEPARTMENT	PREPARED BY
September 22, 2025	Water	

AGENDA ITEM # 20

Water - Surplus of Vehicles

BACKGROUND

The Water Department is requesting 2 vehicles to be surplused. They are as follows;

2002 GMC C7500 VIN# 1GDM7J1C73F511102 - DUMP TRUCK1995 FORD LTL 9000 VIN # 1FDYA99L7SVA500025 - DUMP TRUCK The vehicles have surpassed the mileage threshold for county vehicles, as well as some functionality issues, and have since been replaced with new inventory. We are requesting the sale of these 2 vehicles on GovDeals.

RECOMMENDED MOTION

BUDGET IMPACT

N/A

APPROVED FOR BUDGET YEAR

No

ATTACHMENTS

None

Board of Commissioners Meeting
Agenda Item Summary

MEETING DATE	DEPARTMENT	PREPARED BY
September 22, 2025	Information Technology	

AGENDA ITEM # 21

Donation of Computers to the Public School System

BACKGROUND

The I.T. department has been buying out the computers when they come off lease as it costs less to buy them than it does to ship them back. For this reason we have built up a surplus of computers that are five or six years old. This items is asking the board to approve donating some of them to the public schools who have identified a need.

RECOMMENDED MOTION

Approve the donation

BUDGET IMPACT

No budget impact

APPROVED FOR BUDGET YEAR

No

ATTACHMENTS

1. Computer Donation

CALDWELL COUNTY
FIXED ASSETS DISPOSITION FOR
DELETION/ TRANSFER/SURPLUS FORM FOR EQUIPMENT OR VEHICLES

This form must be typed or written in ink. A separate form must be completed for each equipment item or lot. If you are disposing of multiple items in the same category (e.g., 20 computers), complete this page then list the individual items with serial numbers and tag numbers on an attached sheet. Non-equipment items such as chairs, tables, desks, etc. may be grouped as one lot. To ensure the correct equipment is removed from your department, the inventory tag number must be supplied. **The original copy of this document must be sent to the Purchasing Department.**

To be Completed by Department

Inventory Equipment Number: Upgrade Tag Number:

Description of item: 200 Desktop Computers, 75 Laptop Computers, 86 Computer Displays/Monitors

Manufacturer: Dell	Model:		Year:
Serial / VIN Number:	Color:	Mileage:	Estimated Value:

Condition: ☐ New X Good ☐ Poor ☐ Needs Repair ☐ Parts Missing
Explanation: Devices are functional in used condition, cosmetic wear, and storage or software removed where required

Vehicles: ☐ Starts ☐ Starts w/ boost ☐ Is Drivable ☐ Is not Drivable ☐ 6 cyl ☐ 8 cyl ☐Gas ☐Diesel ☐Cracked Glass ☐Minor Scratches ☐Major Scratches ☐ Exposed Wires from removal of equipment ☐A/C ☐Air Bag ☐AM/FM Radio ☐Tilt Steering ☐Power Doors/Locks ☐Power Seats ☐Cruise Control

Int. Condition _____ Color _____ Ext. Condition _____ Color _____

Decals ☐have been removed ☐impressions remain ☐no impressions left ☐ Tag ☐ Gas Fob ☐ Keys turned in ☐WEX Card

Computer Equipment: Has software and data files been erased, with proper documentation filed to comply with applicable software licenses? X Yes ☐ No --**IT Dept signature required on all computer items** _____ Date 5 sept 2025

Please check one of the following:

☐ Surplus ☐ Parts Only ☐ Stolen (attach police report) ☐ Lost (can't locate) ☐ For Sale (Gov Deals) ☐Commissioners

☐ Traded in for _____(equip#)

☐ Moved to another room/building within the department _____
(new building and room#/location)

X Transferred to another department: Caldwell County Schools
(new department and location)

☐ Other _____

Were any of these items purchased with grant, state or federal funds? ☐ Yes ☐ No
If Yes, attach instructions from grantor stating how to dispose of or contact grants dept for instructions.

Department Name: Caldwell County Information Technology	Department Number: 4160
Location of Item (Building and Room): County Plaza & DHHS IT Storage rooms	Phone Number: 828-757-1335

Authorized Dept Signature:	Date:
Authorized Dept Signature (receiving the transfer):	Date:

To be Completed by Finance Department

Updated to Gov Deals by:	**Date:**
Updated Inventory by:	**Date:**

County Managers Signature _____ Date _____

Board of Commissioners Meeting
Agenda Item Summary

MEETING DATE	DEPARTMENT	PREPARED BY
September 22, 2025	Administration	

AGENDA ITEM # 22

Town of Sawmills Fireworks Application

BACKGROUND

RECOMMENDED MOTION

BUDGET IMPACT

APPROVED FOR BUDGET YEAR

No

ATTACHMENTS

1. Sawmills Baired Park Fall Fireworks Show Letter 2025
2. Sawmills Baird Park Fall Fireworks 2025 Application

Commissioners
Randy T. Church, Chairman
Michael W. LaBrose, Vice Chairman
Jeff Branch
Donnie Potter
Patrick Starnes

Wayne Rash, Interim County Manager

County of Caldwell
PO Box 2200
Lenoir, NC 28645
Phone (828) 757-1300
Fax (828) 757- 1295

www.caldwellcountync.org

To: Mr. Rash

From: Ricky K Brown

Ref: Fireworks Display

Date: August 25th , 2025

Due to some changes in the North Carolina law, fireworks displays are now required to be approved by the County Board of Commissioners. This change came in effect February 1, 2010, and the approval must be granted prior to a permit being issued by the Fire Marshal's Office. I have attached a copy of General Statute 14-413, and copies of one (1) application packet for fireworks display in Caldwell County. The date of the display is October 11th, 2025 and conducted by Sky Works Pyro for the Town of Sawmills Baird Park located at 4077 Baird Dr, Hudson NC 28638. The General Statute requires that the County ensures proof of insurance prior to providing approval. A copy of the insurance certificate is provided in the packet. I have required that the information be submitted by each applicant that is required by the North Carolina Fire Code and this office will conduct the necessary inspections of these sites prior to the display. I would respectfully request that this fireworks display be placed on the next agenda for consideration by the Board. It is my understanding that most Counties are placing these items on the consent agenda once the insurance certificate has been verified. As always, if I can be of any further assistance in this matter, please do not hesitate to contact me.

Ricky K. Brown
Caldwell County Fire Marshal
Phone# 828-757-1277
Email: rbrown@caldwellcountync.org

SKYWORKS
PYRO

Skyworks Pyro
195 Rodgers Ridge Rd
Newland, NC 28657
Ph. 828-260-2619
events@skyworkspyro.com

Today's Date: 8/25/2025

Attention: Caldwell County Fire Marshal

Re: application for fireworks permit

Please find the attached documents listed below in support of our request for a permit for an outdoor fireworks display.

- application
- Shot list
- Certificate of insurance
- Mapped Site display
- Copy of operator license
- Contingency plan
- Copy of ATF license
- Emergency contact numbers

Date/time of show: Saturday, 10/11/2025, time TBD
Lead Operator: Eric Wright, ph.828-260-2619
Sponsor & location: Town of Sawmills, 4077 Baird Dr, Hudson, NC 28638
Ignition system: hand-fired
Size of product: 1.3g

Please let me know if further information is needed.

Thank you,
Eric Wright

Eric Wright, President
Skyworks Pyro

Caldwell County Fire Marshal's Office

Phone (828)757-1277 | Ricky K. Brown, Fire Marshal | Fax (828)757-1182
2345 Morganton Blvd.
PO Box 2200
Lenoir NC, 28645

APPLICATION FOR FIREWORKS DISPLAY PERMIT

- Name: JECO Pyrotechnics LLC - Skyworks Pyro (individual, group or organizational sponsor)
- Address: 195 Rogers Ridge Rd.
  Newland, NC 28657

- Location of Display: 4077 Baird Dr. (Street Address)
  Hudson, NC 28638

- Name, Address and Phone number of fireworks display operator:
  ERIC WRIGHT 195 Rogers Ridge Rd. Newland, NC 28657 (828) 260-2619
- Date and Time of Fireworks Display: 10-11-25 9:00 pm
- Proposed Rain/Wind date if event is postponed: N/A
- Provide a copy of approval for the fireworks display from the Caldwell County Commissioners or from the Municipality if authority has been transferred by the Board of Commissioners.
- Provide the qualifications of the operator which demonstrate experience with use of fireworks and knowledge of all safety precautions related to the storage, handling or use of fireworks. Operators **must have a Permit from the Office of State Fire Marshal** and provide a copy of permits of all personnel involved in the display to this office or provide documentation as required for assistants on site.
- Provide Evidence of Financial Responsibility by the sponsor of the event or the operator of the fireworks display. (Insurance Certificate) **Caldwell County is to be included in the Certificate Holder section.**
- Provide a "Procedure Plan for Failures" which establishes procedures to follow and actions to be taken in the event that a shell fails to ignite or other malfunctions.
- Provide a diagram (including distances) of the grounds on which the outdoor fireworks display is to be held showing the point at which the fireworks are to be discharged, the location of all buildings, highways and other lines of communication, the lines behind which the audience is to be restrained, and the location of other possible overhead obstructions.
- Provide information regarding the number and types of fireworks which will be discharged.
- Provide information regarding the manner and place of storage of such fireworks prior to delivery to the outdoor fireworks display site.

By signing this document, the applicant agrees that the operation of this outdoor fireworks display will conform to the terms of NFPA 1123 or NFPA 1126, and the General Statutes of North Carolina.

Eric Wright
(Signature of Applicant)

8-25-25
(Date)

SKYWORKS
PYRO

Skyworks Pyro
195 Rodgers Ridge Rd
Newland, NC 28657
Ph. 828-260-2619
events@skyworkspyro.com

Shot List

Display Date: 10/11/2025

Show Sponsor:
Town of Sawmills
4076 US Hwy 321-A
Sawmills, NC 28630

Location of Show:
Town of Sawmills
4077 Baird Dr
Hudson, NC 28638

Shots to be fired:

Number of shots	Description
264	2.5" artillery shells
216	3" artillery shells
144	4" artillery shells
31	5" artillery shells

CERTIFICATE OF LIABILITY INSURANCE

DATE (MM/DD/YYYY): 3/30/2025

THIS CERTIFICATE IS ISSUED AS A MATTER OF INFORMATION ONLY AND CONFERS NO RIGHTS UPON THE CERTIFICATE HOLDER. THIS CERTIFICATE DOES NOT AFFIRMATIVELY OR NEGATIVELY AMEND, EXTEND OR ALTER THE COVERAGE AFFORDED BY THE POLICIES BELOW. THIS CERTIFICATE OF INSURANCE DOES NOT CONSTITUTE A CONTRACT BETWEEN THE ISSUING INSURER(S), AUTHORIZED REPRESENTATIVE OR PRODUCER, AND THE CERTIFICATE HOLDER.

IMPORTANT: If the certificate holder is an ADDITIONAL INSURED, the policy(ies) must be endorsed. If SUBROGATION IS WAIVED, subject to the terms and conditions of the policy, certain policies may require an endorsement. A statement on this certificate does not confer rights to the certificate holder in lieu of such endorsement(s).

PRODUCER
Ryder Rosacker McCue & Huston (MGD by Hull & Company)
509 W Koenig St
Grand Island NE 68801

CONTACT NAME: Kristy Wolfe
PHONE (A/C, No, Ext): 308-382-2330 **FAX (A/C, No):** 308-382-7109
E-MAIL ADDRESS: kwolfe@ryderinsurance.com

INSURER(S) AFFORDING COVERAGE	NAIC #
INSURER A : SCOTTSDALE INS CO	41297
INSURER B :	
INSURER C :	
INSURER D :	
INSURER E :	
INSURER F :	

INSURED
JECO Pyrotechnics Inc
195 Rogers Ridge Rd
Newland NC 28657

COVERAGES **CERTIFICATE NUMBER:** 466140230 **REVISION NUMBER:**

THIS IS TO CERTIFY THAT THE POLICIES OF INSURANCE LISTED BELOW HAVE BEEN ISSUED TO THE INSURED NAMED ABOVE FOR THE POLICY PERIOD INDICATED. NOTWITHSTANDING ANY REQUIREMENT, TERM OR CONDITION OF ANY CONTRACT OR OTHER DOCUMENT WITH RESPECT TO WHICH THIS CERTIFICATE MAY BE ISSUED OR MAY PERTAIN, THE INSURANCE AFFORDED BY THE POLICIES DESCRIBED HEREIN IS SUBJECT TO ALL THE TERMS, EXCLUSIONS AND CONDITIONS OF SUCH POLICIES. LIMITS SHOWN MAY HAVE BEEN REDUCED BY PAID CLAIMS.

INSR LTR	TYPE OF INSURANCE	ADDL INSR	SUBR WVD	POLICY NUMBER	POLICY EFF (MM/DD/YYYY)	POLICY EXP (MM/DD/YYYY)	LIMITS	
A	**GENERAL LIABILITY** X COMMERCIAL GENERAL LIABILITY CLAIMS-MADE X OCCUR GEN'L AGGREGATE LIMIT APPLIES PER: X POLICY PRO-JECT LOC			CPS4078576	10/25/2024	10/25/2025	EACH OCCURRENCE DAMAGE TO RENTED PREMISES (Ea occurrence) MED EXP (Any one person) PERSONAL & ADV INJURY GENERAL AGGREGATE PRODUCTS - COMP/OP AGG	$ 1,000,000 $ 100,000 $ 5,000 $ 1,000,000 $ 2,000,000 $ 2,000,000
	AUTOMOBILE LIABILITY ANY AUTO ALL OWNED AUTOS SCHEDULED AUTOS HIRED AUTOS NON-OWNED AUTOS						COMBINED SINGLE LIMIT (Ea accident) BODILY INJURY (Per person) BODILY INJURY (Per accident) PROPERTY DAMAGE (Per accident)	$ $ $ $
	UMBRELLA LIAB OCCUR **EXCESS LIAB** CLAIMS-MADE DED RETENTION $						EACH OCCURRENCE AGGREGATE	$ $
	WORKERS COMPENSATION AND EMPLOYERS' LIABILITY ANY PROPRIETOR/PARTNER/EXECUTIVE OFFICER/MEMBER EXCLUDED? Y / N **(Mandatory in NH)** If yes, describe under DESCRIPTION OF OPERATIONS below	N / A					WC STATU-TORY LIMITS OTH-ER E.L. EACH ACCIDENT E.L. DISEASE - EA EMPLOYEE E.L. DISEASE - POLICY LIMIT	 $ $ $

DESCRIPTION OF OPERATIONS / LOCATIONS / VEHICLES (Attach ACORD 101, Additional Remarks Schedule, if more space is required)
Regarding the General Liability coverage, Waiver of Subrogation applies to the entities listed below per attached form CG 24 04 when required by written agreement.
Regarding the General Liability coverage, Blanket Additional Insured applies to the entities listed below per attached form GLS-150s when required by written agreement.
Regarding the General Liability coverage, Primary and Non-Contributory coverage applies to the entities listed below per attached form CG 20 01 when required by written agreement.
Additional Insured: Town of Sawmills; Caldwell County, NC
Location of show: 4077 Baird Drive, Hudson NC, 28638
dates of display: 05/10/2025 & 10/11/2025

CERTIFICATE HOLDER

Town of Sawmills
4076 US Highway 321-A
Sawmills NC 28630

CANCELLATION

SHOULD ANY OF THE ABOVE DESCRIBED POLICIES BE CANCELLED BEFORE THE EXPIRATION DATE THEREOF, NOTICE WILL BE DELIVERED IN ACCORDANCE WITH THE POLICY PROVISIONS.

AUTHORIZED REPRESENTATIVE

© 1988-2010 ACORD CORPORATION. All rights reserved.

Town of Sawmills 4077 Baird Dr Hudson NC 28638

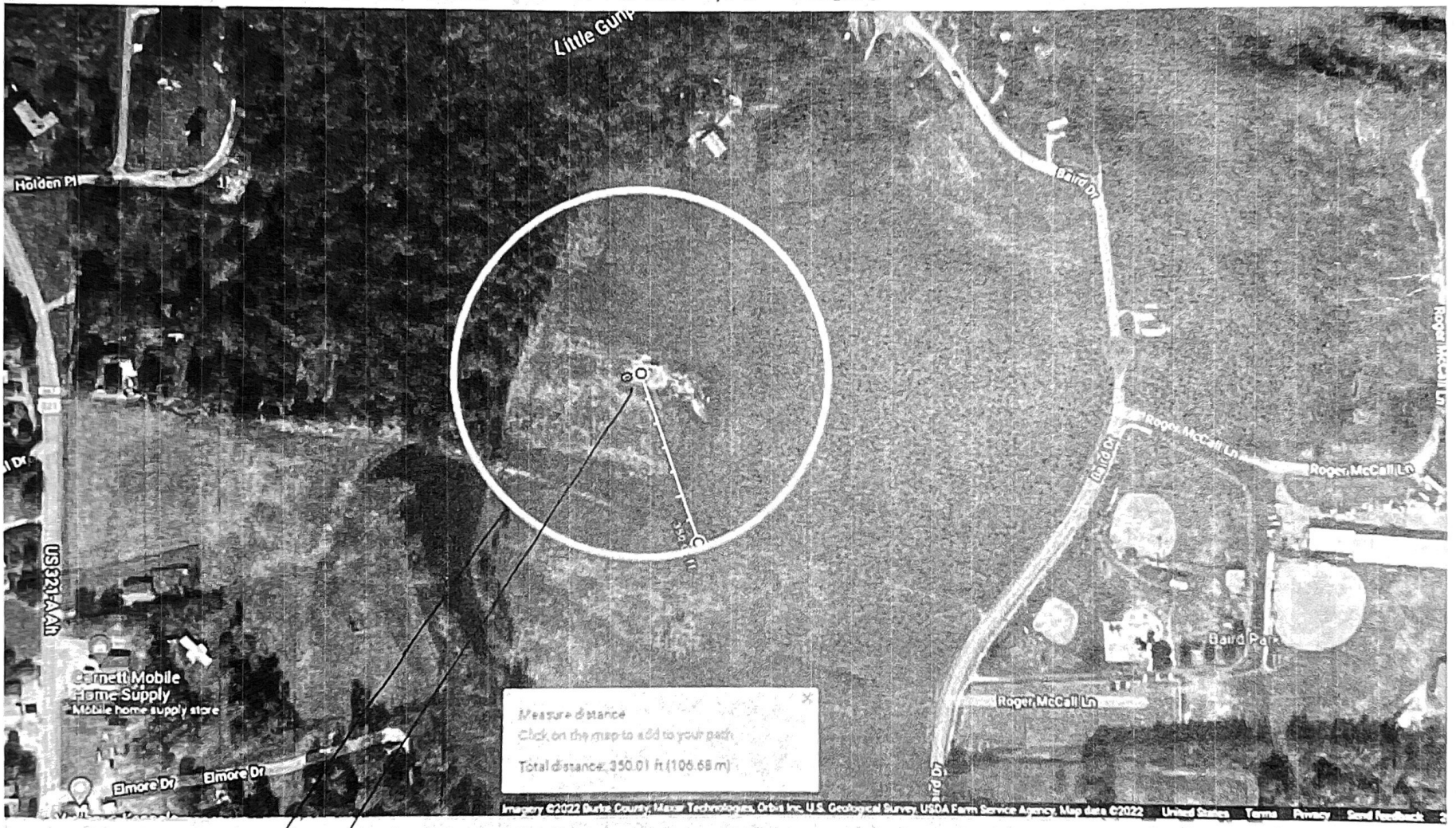

Display Site

Discharge Site

Outdoor Pyrotechnics Display

OPERATORS LICENSE

JUN

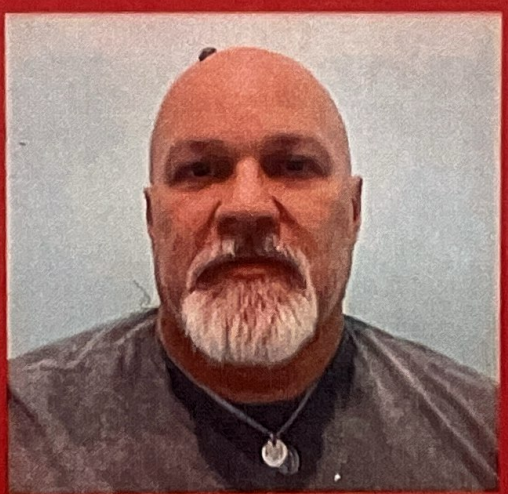

2026

Eric Wright
License # 3822

SKYWORKS
PYRO

CONTINGENCY PLAN

1.3g & 1.4g Outdoor Pyrotechnic Display

In the instance of a catastrophe or malfunction during the firing of an outdoor fireworks display.

1) Immediately cease firing of all fireworks.
2) Ensure all pyrotechnic materials which have been ignited are doused with water and extinguished.
3) Assemble the full pyrotechnic crew in the previously designated area, and ensure the safety of all pyrotechnicians on site.
4) Ensure the safety of all spectators viewing the show.
5) Immediately contact and remain in continuous contact with the fire department and emergency management on site.
6) Contact the show sponsor to discuss the situation and verify the safety of all involved.
7) Once all of the above issues have been addressed, if safe to do so, continue discharge of the show.
8) If unsafe to continue, remove all live materials from the site and attend to immediate concerns.

Updated 01/04/2024

U.S. Department of Justice
Bureau of Alcohol, Tobacco, Firearms and Explosives

Federal Explosives License/Permit
(18 U.S.C. Chapter 40)

In accordance with the provisions of Title XI, Organized Crime Control Act of 1970, and the regulations issued thereunder (27 CFR Part 555), you may engage in the activity specified in this license or permit within the limitations of Chapter 40, Title 18, United States Code and the regulations issued thereunder, until the expiration date shown. THIS LICENSE IS NOT TRANSFERABLE UNDER 27 CFR 555.53. See "WARNINGS" and "NOTICES" on reverse.

Direct ATF Correspondence To	ATF - Chief, FELC 244 Needy Road Martinsburg, WV 25405-9431	License/Permit Number	**1-NC-011-54-6B-01040**
Chief, Federal Explosives Licensing Center (FELC) Marna Howard		Expiration Date	**February 1, 2026**

Name
DBA: SKYWORKS PYRO

Premises Address (Changes? Notify the FELC at least 10 days before the move.)
195 RODGERS RIDGE RD
NEWLAND, NC 28657-

Type of License or Permit

54-USER OF EXPLOSIVES

Purchasing Certification Statement

The licensee or permittee named above shall use a copy of this license or permit to assist a transferor of explosives to verify the identity and the licensed status of the licensee or permittee as provided by 27 CFR Part 555. The signature on each copy must be an original signature. A faxed, scanned or e-mailed copy of the license or permit with a signature intended to be an original signature is acceptable. The signature must be that of the Federal Explosives Licensee (FEL) or a responsible person of the FEL. I certify that this is a true copy of a license or permit issued to the licensee or permittee named above to engage in the business or operations specified above under "Type of License or Permit."

Eric Wright — Licensee/Permittee Responsible Person Signature
President — Position/Title
Eric Wright — Printed Name
1-13-24 — Date

Mailing Address (Changes? Notify the FELC of any changes.)

JECO PYROTECHNICS LLC
DBA: SKYWORKS PYRO
195 RODGERS RIDGE RD
NEWLAND, NC 28657-

Previous Edition is Obsolete JECO PYROTECHNICS LLC:195 RODGERS RIDGE RD:28657:1-NC-011-54-6B-01040:February 1, 2026:54-USER OF EXPLOSIVES

ATF Form 5400 14/5400 15 Part I
Revised September 2011

Federal Explosives License (FEL) Customer Service Information

Federal Explosives Licensing Center (FELC)
244 Needy Road
Martinsburg, WV 25405-9431

Toll-free Telephone Number: (877) 283-3352
Fax Number: (304) 616-4401
E-mail: FELC@atf.gov

ATF Homepage: www.atf.gov

Change of Address *(27 CFR 555.54(a)(1))*. Licensees or permittees may during the term of their current license or permit remove their business or operations to a new location at which they intend regularly to carry on such business or operations. The licensee or permittee is required to give notification of the new location of the business or operations not less than 10 days prior to such removal with the Chief, Federal Explosives Licensing Center. The license or permit will be valid for the remainder of the term of the original license or permit. **(The Chief, FELC, shall, if the licensee or permittee is not qualified, refer the request for amended license or permit to the Director of Industry Operations for denial in accordance with § 555.54.)**

Right of Succession *(27 CFR 555.59)*. (a) Certain persons other than the licensee or permittee may secure the right to carry on the same explosive materials business or operations at the same address shown on, and for the remainder of the term of, a current license or permit. Such persons are: (1) The surviving spouse or child, or executor, administrator, or other legal representative of a deceased licensee or permittee; and (2) A receiver or trustee in bankruptcy, or an assignee for benefit of creditors. (b) In order to secure the right provided by this section, the person or persons continuing the business or operations shall furnish the license or permit for for that business or operations for endorsement of such succession to the Chief, FELC, within 30 days from the date on which the successor begins to carry on the business or operations.

(Continued on reverse side)

Cut Here ✂

Federal Explosives License/Permit (FEL) Information Card

License/Permit Name: **JECO PYROTECHNICS LLC**

Business Name: **DBA: SKYWORKS PYRO**

License/Permit Number: **1-NC-011-54-6B-01040**

License/Permit Type: **54-USER OF EXPLOSIVES**

Expiration: **February 1, 2026**

Please Note: Not Valid for the Sale or Other Disposition of Explosives.

WARNINGS

1. As provided in Title XI of the Organized Crime Control Act of 1970 (U.S.C. § 842(i)), it is unlawful for any person who (1) is under indictment for, or has been convicted in any court of, a crime punishable by imprisonment for a term exceeding 1 year, (2) is a fugitive from justice, (3) is an unlawful user of, or addicted to any controlled substance *(as defined in section 102 of the Controlled Substances Act (21 U.S.C. 802))*, (4) has been adjudicated as a mental defective or has been committed to a mental institution, to ship, transport, or receive any explosive materials in interstate or foreign commerce, (5) is an alien, other than an alien who is lawfully admitted for permanent residence *(as that term is defined in section 101(a)(20) of the Immigration and Naturalization Act)*, or meets any other exception under section 842(i)(5), (6) has been discharged from the armed forces under dishonorable conditions, or (7) having been a citizen of the United States, has renounced the citizenship of that person.
2. **Federal Regulation 27 CFR 555.53 - Licensees and permits issued under this part are not transferable to another person. In the event of the lease, sale, or other transfer of the business or operations covered by the license or permit, the successor must obtain the license or permit required by this part before commencing business or operations.**
3. **Alteration or Changes to the License or Permit. Alterations or changes in the original license or permit or in duplications thereof violates 18 U.S.C. 1001, an offense punishable by imprisonment for not more than 5 years and/or a fine of not more than $250,000.**

NOTICES

1. Any change in trade name or control of this business or operations MUST be reported within 30 days of the change to the Chief, Federal Explosives Licensing Center (FELC), 244 Needy Road, Martinsburg, WV 25405-9431. (27 CFR 555.56-555.57). A licensee or permittee who reports a Change of Control must, upon expiration of the license or permit, file an ATF Form 5400.13/5400.16.
2. Under § 555.46, Renewal of License/Permit, if a licensee or permittee intends to continue the business or operations described on a license or permit issued under this part during any portion of the ensuing year, the licensee or permittee shall, unless otherwise notified in writing by the Chief, FELC, execute and file with ATF prior to the expiration of the license or permit an application for a license or permit renewal, ATF Form 5400.14/5400.15 Part III, in accordance with the instructions on the form, and the required fee. In the event the licensee or permittee does not timely file an ATF Form 5400.14/5400.15 Part III, the licensee or permittee must file an ATF Form 5400.13/5400.16 as required by § 555.45, and obtain the required license or permit before continuing business or operations. A renewal application will automatically be mailed by ATF to the "mailing address" on the license or permit approximately 60 days prior to the expiration date of the license or permit. If the application is not received 30 days prior to the expiration date, the licensee or permittee should contact the FELC. Note: The user-limited permits are not renewable.
3. This license or permit is conditional upon compliance by you with the Clean Water Act (33 U.S.C. § 1341(a)).
4. THIS LICENSE OR PERMIT MUST BE POSTED AND KEPT AVAILABLE FOR INSPECTION (27 CFR 555.101).

ATF Form 5400.14/5400.15 Part I
Revised October 2011

Federal Explosives License (FEL) Customer Service Information

(Continued from front)

Discontinuance of Business *(27 CFR 555.61)(27 CFR 555.128)*. Where an explosives materials business or operations is succeeded by a new licensee or permittee, the records prescribed by this subpart shall appropriately reflect such facts and shall be delivered to the successor, or may be, within 30 days following business discontinuance, delivered to the ATF Out-of-Business Records Center, 244 Needy Road, Martinsburg, WV 25405, or to any ATF office in the division in which the business was located. Where discontinuance of the business is absolute, the records shall be delivered within 30 days following the business discontinuance to the ATF Out-of-Business Records Center, 244 Needy Road, Martinsburg, WV 25405, or to any ATF office in the division in which the business was located.

Explosive materials must be stored in conformance with requirements set forth in 27 CFR, Part 55. It is unlawful for any person to store any explosive materials in a manner not in conformity with these regulations.

TO REPORT LOST OR STOLEN EXPLOSIVES, YOU MUST IMMEDIATELY NOTIFY ATF:
CALL TOLL FREE - (888) ATF-BOMB

✂ Cut Here

Federal Explosives Licensing Center (FELC)
244 Needy Road
Martinsburg, WV 25405-9431

Toll-free number: (877) 283-3352
Fax number: (304) 616-4401
E-mail: FELC@atf.gov

ATF Hotline Numbers

Arson Hotline: 1-888-ATF-FIRE (1-888-283-3473)
Bomb Hotline: 1-888-ATF-BOMB (1-888-283-2662)
Report Illegal Firearms Activity: 1-800-ATF-GUNS (1-800-283-4867)
Firearms Theft Hotline: 1-888-930-9275
Report Stolen, Hijacked or Seized Cigarettes: 1-800-659-6242
Other Criminal Activity: 1-888-ATF-TIPS (1-888-283-8477)

SKYWORKS
PYRO

Emergency Contact and Response Form

1.3g & 1.4g fireworks

JECO Pyrotechnics LLC, DBA Skyworks Pyro
195 Rodgers Ridge Rd
Newland, NC 28657
Ph. 828-260-2619

Infotrac: 1-800-535-5053

Emergency response
(contract # 113891)

1st point of contact: Eric Wright, president/operator; Cell # 828-260-2619

2nd point of contact: Cody Greene, vice president/operator; Cell # 828-387-1473

3rd point of contact: Beth Wright, secretary/operator, cell # 828-260-4929

4th point of contact: Shane Cantrell, lead operator, cell # 828-467-9024

Last updated 1/01/2024

Board of Commissioners Meeting

Agenda Item Summary

MEETING DATE	DEPARTMENT	PREPARED BY
September 22, 2025	Administration	

AGENDA ITEM # 23

Opioid Settlement- Purdue & Sackler

BACKGROUND

RECOMMENDED MOTION

BUDGET IMPACT

APPROVED FOR BUDGET YEAR

No

ATTACHMENTS

1. Resolution- Purdue-Sackler 2025

RESOLUTION

21-2025

RESOLUTION BY THE CALDWELL COUNTY BOARD OF COMMISSIONERS AUTHORIZING EXECUTION OF OPIOID SETTLEMENTS WITH SECONDARY OPIOID MANUFACTURERS, PURDUE PHARMA LP, AND THE SACKLER FAMILY, AND APPROVING THE THIRD SUPPLEMENTAL AGREEMENT FOR ADDITIONAL FUNDS BETWEEN THE STATE OF NORTH CAROLINA AND LOCAL GOVERNMENTS ON PROCEEDS RELATING TO THE SETTLEMENT OF OPIOID LITIGATION

WHEREAS more than 41,500 North Carolinians lost their lives to a drug overdose from 2000-2023.

WHEREAS the Centers for Disease Control and Prevention has estimated the total economic burden of prescription opioid misuse alone in the United States to be $78.5 billion a year, including the costs of healthcare, lost productivity, addiction treatment, and criminal justice involvement;

WHEREAS certain counties and municipalities in North Carolina joined with thousands of local governments across the country to file lawsuits against opioid companies, manufacturers, pharmaceutical distributors, and chain drug stores to hold those companies accountable for their misconduct;

WHEREAS settlements (collectively "the Secondary Opioid Manufacturer Settlements") have been reached in litigation against Alvogen, Inc., Amneal Pharmaceuticals LLC, Apotex Corp., Hikma Pharmaceuticals USA Inc. f/k/a West-Ward Pharmaceuticals Corp., Indivior Inc., Sun Pharmaceutical Industries, Inc., Viatris Inc., and Zydus Pharmaceuticals (USA) Inc., as well as their subsidiaries, affiliates, officers, and directors (collectively "the Secondary Opioid Manufacturer Defendants") named in the Secondary Opioid Manufacturer Settlements;

WHEREAS representatives of local North Carolina governments, the North Carolina Association of County Commissioners, and the North Carolina Department of Justice have negotiated and prepared a Third Supplemental Agreement for Additional Funds ("SAAF-3") to provide for the equitable distribution of the proceeds of the Secondary Opioid Manufacturer Settlements;

WHEREAS settlements have been reached, under Purdue Pharma L.P.'s bankruptcy plan, whereby Purdue Pharma L.P. ("Purdue") and members of the Sackler family will pay approximately $7.4 billion to settle opioid claims across the nation, which settlements would be subject in North Carolina to the equitable distribution of the proceeds as set forth in the Memorandum of Agreement ("MOA") which has already been approved by this Board;

WHEREAS by joining the Secondary Opioid Manufacturer Settlements, approving the SAAF-3, and approving the bankruptcy plan and settlements relating to Purdue and the Sackler family, the state and local governments maximize North Carolina's share of opioid settlement funds to ensure the needed resources reach communities, as quickly, effectively, and directly as possible;

WHEREAS it is advantageous to all North Carolinians for local governments, including Caldwell County and its residents, to sign onto the Secondary Opioid Manufacturer Settlements, SAAF-3, and approving the bankruptcy plan and settlements relating to Purdue and the Sackler family, in order to demonstrate solidarity in response to the opioid overdose crisis, and to maximize the share of opioid settlement funds received both in the State and Caldwell County to help abate the harm; and

WHEREAS both the MOA and SAAF-3 directs substantial resources over multiple years to local governments on the front lines of the opioid overdose epidemic while ensuring that these resources are used in an effective way to address the crisis;

NOW, THEREFORE, BE IT RESOLVED that the Caldwell County Board of Commissioners hereby authorizes the County Manager or County Attorney to execute, on behalf of Caldwell County, the necessary documents to enter into opioid settlement agreements, as set forth herein, with the Secondary Opioid Manufacturer Defendants, to execute the SAAF-3, and to approve the bankruptcy plan and settlement agreements relating to Purdue and the Sackler family, and to provide such documents to Rubris, the Implementation Administrator, subject to a pre-audit certificate thereon by the County Chief Financial Officer, if applicable, and approval as to form and legality by the County Attorney.

Adopted this 22 day of September, 2025.

_____
Randy T. Church, Chairman
Caldwell County Board of Commissioners

ATTEST:

_____
Abby Rich, County Clerk

Board of Commissioners Meeting
Agenda Item Summary

MEETING DATE	DEPARTMENT	PREPARED BY
September 22, 2025	Administration	

AGENDA ITEM # 24

Reappointment of Granite Falls ETJ Planning Members

BACKGROUND

Wylie Moore and Patrick Barker are requesting reappointment to the Granite Falls ETJ Planning Board.

RECOMMENDED MOTION

BUDGET IMPACT

APPROVED FOR BUDGET YEAR

No

ATTACHMENTS

None

Board of Commissioners Meeting
Agenda Item Summary

MEETING DATE	DEPARTMENT	PREPARED BY
September 22, 2025	Administration	

AGENDA ITEM # 25

Appointment to the Regional Aging Advisory Committee

BACKGROUND

There is a vacancy on the RAAC. William Icenhour, Robert G Hatley, and Kathy Coyle Graves have all applied for appointment.

RECOMMENDED MOTION

BUDGET IMPACT

APPROVED FOR BUDGET YEAR

No

ATTACHMENTS

None

Caldwell County
North Carolina
Board of Commissioners Meeting

August 11, 2025 at 6:00 PM
City-County Chambers
905 West Avenue NW, Lenoir

MINUTES

Attendance

Randy T. Church, Chairman
Mike LaBrose, Vice Chairman
Jeff Branch, Commissioner
Donnie Potter, Commissioner
Patrick Starnes, Commissioner
Wayne Rash, Interim County Manager
Destin Hall, County Attorney
Abby Rich, County Clerk

Call to Order
Chairman Church called the August 11, 2025, Board of Commissioners meeting to order at 6:04 PM.

Public Comment Period
There were no individuals signed up for public comment.

Invocation
Discipleship Pastor Kevin Burns with Waterlife Church led the invocation for those in attendance.

Pledge of Allegiance
Commissioner Patrick Starnes led the Pledge of Allegiance for those in attendance.

Agenda Amendments from the Board, Manager & Public
Interim County Manager Wayne Rash informed the Board of four amendments to the agenda. These amendments were the addition of Item 24, an Amendment of the Opioid Fund Expenditure Resolution, the addition of Item 25, an Acceptance of Grant Funding for the Sheriff's Office, the addition of Item 26, the Rollover of STRAP Grant Funding, and the addition of Item 27, a Revision of the Board of Commissioners Meeting Dates for the remainder of the Calendar Year.

Vice Chairman LaBrose made the motion to adopt the agenda as presented.
The motion carried unanimously.

Before beginning the review of the agenda items, Interim County Manager Wayne Rash informed the Board that, at the direction of the County Attorney, "A list of the persons owning

real property whose taxes for the preceding year remain unpaid is available in the Caldwell County Tax Department."

Agenda Items

1. EMT of the Year

Irv Eurto of American Legion Post 29 came to the podium and introduced the other Post 29 members in attendance with him. Mr. Eurto told the Board each year Post 29 accepts a nominee for EMT of the Year and Sheriff's Deputy of the Year. Mr. Eurto asked Emergency Services Chief, Trevor Key, to come to the podium. Chief Key announced Paramedic Zack Bumgarner as the EMT of the Year. Chief Key said Mr. Bumgarner joined Caldwell EMS in 2022, and he is a proactive employee and a great recruiter for the department.

2. Deputy of the Year

Sheriff Bean came to the podium to introduce the Deputy of the Year, Detective Jacob Britt. Sheriff Bean described Detective Britt as a hard worker with a positive attitude.

3. Bailiff of the Year

Sheriff Bean remained at the podium to introduce the North Carolina Bailiff of the Year. Sheriff Bean said Bailiff Frankie Holder was chosen from a group of 100 applicants. Sheriff Bean commended Deputy Holder for working tirelessly even during times of personal adversity.

4. RZ 2025-1 GB to L-IND - Connelly Springs Rd.

Assistant Planning Director Kim McGee came to the podium to present a rezoning request. The request is to rezone 10 acres located at 2881 Connelly Springs Rd. Granite Falls, from general business to light industrial. Raymond Dollar is the property owner and the parcel is vacant and heavily wooded. Ms. McGee provided the Planning Board approved the request with the contingency statement that "Approval of this request is reasonable and in the public's best interest because the amendment is consistent with the County's Comprehensive Plan that contains a future land use map that aligns with the request by suggesting Light Industrial zoning for this area (via a Commercial Corridor node). There's no evidence that the rezoning would negatively impact the surrounding neighborhood and adjacent properties, and it can promote public health, safety and welfare by allowing the manufacturing of goods to the public as well as other businesses. Approval is also contingent on NC-DOT driveway permit and septic and well permit approval."

The Board asked about the access to water at this site. There was discussion about the potential for drilling a well and the feasibility of a sprinkler system for an industrial business.

Chairman Church declared the public hearing open and with no individuals signed up to speak, the public hearing was closed.

Commissioner Branch made the motion to adopt the rezoning as presented in the contingency statement.
The motion carried unanimously.

5. Economic Development - Project SpaceX

Economic Development Technician Jesse Trivette came to the podium to present Economic Development Incentives for Project Space X. Chairman Church opened the public hearing, but there were no individuals signed up to speak. Mr. Trivette introduced Jerry Soots and Robert Melton, both representative of the company. The proposed tax agreement would be between Caldwell County and Dynastar Aerospace Machining. The project has been reviewed and recommended for approval by the Economic Development Advisory Committee. Dynastar has communicated its intent to invest $4,400,000 in Caldwell County. The company will be hiring 5 full-time positions within the first year. Over the next 3-5 years the company plans to create approximately 30-40 jobs with an average salary of $65,000. Economic Development would like to offer a tax grant of 50% of the County property taxes paid on the increased net taxable real estate improvements and equipment. This grant would be awarded annually for 3 consecutive years beginning with a tax year of Dynastar's choosing, but no later than December 31, 2027. This grant requires no upfront funding.

Chairman Church stated this funding comes from Sales Tax Reinvestment Funds. Vice Chairman LaBrose asked about the staggering of the percentages over the years for tax grants. Mr. Trivette indicated this project was presented as a flat rate and was discussed as such. This grant will be a flat 50% for 3 years. There was a brief discussion about the water pressure on the site as it relates to the sprinkler system.

Chairman Church closed the public hearing.

Commissioner Potter made the motion to approve the economic development incentive for SpaceX as described by Mr. Trivette.
The motion carried unanimously.

6. Economic Development - Granite Falls Composites, Inc.

Granite Falls Composites was the next project to be presented. Mr. Trivette introduced Jamey Little and Melissa Curtis with Granite Falls Composites. This project is a conversion of Roblon to Granite Falls Composites. Mr. Little said he had heard news Roblon would be divesting its Granite Falls location, and he was concerned about the future of the location and the individuals that worked there. Mr. Little said it looked as though another foreign entity was going to purchase and operate this location and this did not sit well with the leadership team, so, they constructed a management buyout. This deal was completed in July of 2025. They are happy they were able to keep this business local and save over 100 jobs. Chairman Church declared the public hearing declared open, there were no individuals signed up to speak. Mr. Trivette began his presentation by stating this project has been approved for recommendation by the Economic Development Advisory Committee. Under the terms of this agreement, Granite Falls Composites has committed to maintaining 70 full-time jobs. To receive this grant, these jobs must be maintained for a full 12-month period in accordance with the County's established policy and must meet the County's definition of full-time employment, which is no less than 30 hours per week per employee. The Economic Development Advisory Committee recommends that the County offer a $1,000 grant per maintained job for a total maximum incentive of $70,000. These funds will only be awarded after a full 1-year retention period has been completed and the employment has been verified through the office of Economic Development. Additionally, Caldwell County Economic Development is asking for the consideration of a jobs creation incentive agreement between Caldwell County and Granite Falls Composites. Granite

Falls Composites is committed to creating 30 new full-time jobs in Caldwell County by July 30, 2026, while also retaining its 70 current full-time positions. These positions will meet Caldwell County's definition of full-time employment of at least 30 hours per week. The Caldwell County Economic Development Advisory Committee recommends a performance-based grant of $2,000 per job up to a total maximum incentive of $60,000. There are no upfront funds to be distributed. Granite Falls composites must also remain up to date on all County fees and taxes to receive the funding. These funds will come from the Sales Tax Reinvestment Fund.

Attorney Hall made a clarifying statement by saying the requirement to keep any of the grants is that the company has to keep the 70 full-time jobs in the period of the agreement and the new jobs. The company can obtain the old job grants in the period of 1 year if those old jobs were retained, but the company would also have to keep those old jobs, plus a minimum of 5 new jobs from 1 year from that. Mr. Hall said this is really a 2-year deal. The company just receives partial payment a year into it, but the company still has to maintain all of those old jobs and the new jobs throughout the 2-year period or all of the money is clawed back.

Chairman Church declared the public hearing closed.

Commissioner Starnes made the motion to accept the grant as presented by Mr. Trivette.
The motion carried unanimously.

7. Economic Development - Project Picanha

Mr. Trivette introduced Diogo Lobo and Ladislav Lieskovan, representatives of the company for Project Picanha. Chairman Church declared the public hearing open, there were no individuals signed up to speak. Mr. Trivette began his presentation by stating this is a tax grant incentive between Caldwell County and Project Picanha. This company is an agricultural manufacturer of prepackaged proteins here in Caldwell County. This project has been reviewed and recommended for approval by the Economic Development Advisory Committee. Project Picanha has communicated its intent to invest approximately $20,000,000 in Caldwell County. This investment includes a 55,000 square foot expansion of its current facility. This expansion is estimated to create 50+ new jobs. Economic Development is proposing a performance-based tax grant incentive equal to the following percentages of the ad valorem taxes paid by the company that are directly attributable to the improvements made between September 1, 2025, and August 31, 2027. Year 1 will be a 20% tax grant, year 2 will be a 30% tax grant, year 3 will be a 40% tax grant, and years 4 and 5 will be a 50% tax grant. The company may elect to begin the 5-year grant period in any tax year through the year 2027. This grant involves no upfront payments from the County. Chairman Church asked if this tax grant is just based on the additional investment of $20,000,000. Mr. Trivette clarified this is based on the investment attributable to the increase in the tax burden on the company.

Chairman Church declared the public hearing closed.

Commissioner Branch made the motion to approve the agreement as has been presented for Project Picana.

Attorney Hall made a clarifying comment that the investment period is up until December 31 of 2027. This means the company has until that date to make whatever

investment they are planning to make on this project.

The motion carried unanimously.

Consent

Chairman Church turned the meeting to Interim Manager Rash to present the Consent Agenda.

8. **DSS- Hurricane Helene Mitigation Funding Rollover**
   This budget revision rolls over $148,361.50 in Hurricane Helene mitigation funding from the 24-25 FY to the 25-26 FY.

9. **Health Department- Agreement Addendum Funding for Retention and Training**
   An agreement addendum in the amount of $80,462.00. This funding will be used for the training and retention of Health Department employees.

10. **Health Department- Agreement Addendum Funding for WIC**
    An agreement addendum in the amount of $29,869.00. This funding will be used for the support of a Breastfeeding Peer Counselor.

11. **Health Department- Agreement Addendum Funding Communicable Diseases**
    An agreement addendum in the amount of $55,213.00. This funding will be used to expand communicable disease services.

12. **Health Department- Agreement Addendum Funding for Public Health**
    An agreement addendum in the amount of $37,692.00. This funding will be used for public health services.

13. **Health Department- Agreement Addendum Hurricane Helene Mitigation Funds**
    The Health Department received an agreement addendum for Hurricane Helene Mitigation Funding in the amount of $798,920.00.

14. **Health Department- Rollover of Grant Funding**
    This budget revision rolls over $55,030.73 in funding from the 24-25 FY to the 25-26 FY.

15. **Budget Revision and Closing Statement for Communications Center 911 Grant**
    This budget revision closes the 911 Communications Center Grant. The funding amount is $2,659,312.07 and the funds are no longer needed due to a change in project.

16. **Borrowing Resolution for Capital Outlay Loan**
    Finance requested approval of the Borrowing Resolution for the Capital Outlay Loan.

17. **Purchase Order Rollovers from 24-25 Fiscal Year**
    This budget revision rolls over all purchase orders that were not closed out in the 24-25 FY. The total amount is $542,708.12.

18. **SCIF Funding for Ambulance Purchase**
    The County received $275,000.00 in state funding to assist with the purchase of a new

ambulance. This budget revision allows these funds to be spent.

19. Not to Exceed Agreement with Southern Disaster Relief

The Not to Exceed Agreement with SDR needed to be increased from $5,000,000 to $5,325,000 for Hurricane Helene debris clean up.

20. Ratification of Tri County Speedway Special Event Use

Tri-County Speedway hosted Luke Combs to shoot a music video. This event was one of the Speedway's special events for the calendar year.

21. Reappointment of Dr. Rebecca Whisnant to Board of Health

Dr. Rebecca Whisnant requested reappointment to the Board of Health.

22. Approval of July 14, 2025, Meeting Minutes

The approval of the July 14, 2025, meeting minutes was requested.

23. Approval of July 18, 2025, Meeting Minutes

The approval of the July 14, 2025, meeting minutes was requested.

24. Amendment of the Opioid Settlement Expenditure Resolution

A date on the resolution was incorrectly labeled for April instead of July.

25. Acceptance of Grant Funding for the Sheriff’s Office

The County was awarded funding from the Governor’s Crime Commission. This item allows these funds to be brought into the County.

26. Rollover of StRAP Grant Funding

$430,880 is being carried over in StRAP grant funding. This is 100% grant funds.

27. Revision of the Board of Commissioners Meeting Dates

The Board is amending its regular meeting schedule for the remainder of 2025.

Vice Chairman LaBrose made the motion to adopt the consent agenda as presented. The motion carried unanimously.

Adjourn

With there being no more business to attend to, Chairman Church made the motion to adjourn at 7:14 PM.

The motion carried unanimously.

RESOLUTION OF THE COUNTY OF CALDWELL, NORTH CAROLINA APPROVING AN INSTALLMENT FINANCING AGREEMENT TO FINANCE VEHICLES AND EQUIPMENT AND DELIVERY THEREOF AND PROVIDING FOR CERTAIN OTHER RELATED MATTERS

WHEREAS, the County of Caldwell, North Carolina (the "*County*") is a political subdivision validly existing under the constitution, statutes and laws of the State of North Carolina (the "*State*");

WHEREAS, the County has the power, pursuant to the General Statutes of North Carolina to (1) enter into installment contracts in order to purchase, or finance or refinance the purchase of, real or personal property and to finance or refinance the construction or repair of fixtures or improvements on real property and (2) create a security interest in some or all of the property financed or refinanced to secure repayment of the purchase price;

WHEREAS, the Board of Commissioners of the County (the "*Board of Commissioners*") has determined that it is in the best interest of the County to enter into an installment financing (the "*Agreement*") with Banc of America Public Capital Corp (the "*Lender*") in accordance with its proposal dated July 21, 2025 in order to obtain funds to pay the costs of the acquisition and installation of vehicles and equipment (collectively, the "*Projects*"), and to put a security interest in all or a portion of the Projects in favor of the Lender in order to provide security for the County's obligations under the Agreement;

WHEREAS, the County will enter into the Agreement in an aggregate principal amount of not to exceed $2,275,000;

WHEREAS, there has been made available to the Board of Commissioners in the office of the County's Finance Officer the form of the Agreement which the County proposes to approve, enter into and deliver, as applicable, to effectuate the proposed financing at an interest rate as specified in the Agreement and in the bid summary provided to the Board of Commissioners; and

WHEREAS, it appears that the Agreement is in appropriate form and is an appropriate instrument for the purposes intended;

NOW, THEREFORE, BE IT RESOLVED BY THE BOARD OF COMMISSIONERS OF THE COUNTY OF CALDWELL, NORTH CAROLINA, AS FOLLOWS:

Section 1. ***Ratification of Prior Actions.*** All actions of the County Manager, or any individual serving in an interim capacity (the "*County Manager*"), the County Attorney, the Finance Officer and the Clerk to the Board of Commissioners and their respective designees in effectuating the proposed financing are approved, ratified and authorized pursuant to and in accordance with the transactions contemplated by the Agreement.

Section 2. ***Approval, Authorization and Execution of Agreement.*** The Board of Commissioners approves the Projects in accordance with the terms of the Agreement, which will be a valid, legal and binding obligation of the County in accordance with its terms. The Board of Commissioners approves the amount advanced by the Lender to the County pursuant to the Agreement in an aggregate principal amount not to exceed $2,275,000 at an annual interest rate (in the absence of default or change in tax status) shall not exceed 3.5042%, and the financing term shall not exceed five (5) years from closing. The form, terms and content of the Agreement are in all respects authorized, approved and confirmed. The County Manager, the County Attorney, the Finance Officer and the Clerk to the Board of Commissioners, or their respective designees (the "*Authorized Officers*"), are authorized, empowered and directed to execute and deliver the Agreement for and on behalf of the County, including necessary counterparts, in

substantially the form made available to the Board of Commissioners, but with such changes, modifications, additions or deletions therein as they may deem necessary, desirable or appropriate, their execution thereof to constitute conclusive evidence of the approval of the Board of Commissioners of any and all such changes, modifications, additions or deletions. From and after the execution and delivery of the Agreement, each Authorized Officer is authorized, empowered and directed to do all such acts and things and to execute all such documents as may be necessary to carry out and comply with the provisions of the Agreement as executed.

Section 3. ***Further Actions.*** Each Authorized Officer is designated as the County's representative to act on behalf of the County in connection with the transactions contemplated by the Agreement. The Authorized Officers are authorized and directed to proceed with the Projects in accordance with the terms of the Agreement, and to seek opinions on matters of law from the County Attorney, which the County Attorney is authorized to furnish on behalf of the County, and opinions of law from such other attorneys for all documents contemplated under this Resolution as required by law. The Authorized Officers are authorized to designate one or more employees of the County to take all actions which they are authorized to perform under this Resolution, and each is in all respects authorized on behalf of the County to supply all information pertaining to the transactions contemplated by the Agreement. The Authorized Officers are authorized to execute and deliver for and on behalf of the County any and all additional certificates, documents, opinions or other papers and perform all other acts as may be required by the Agreement or as they may deem necessary or appropriate to implement and carry out the intent and purposes of this Resolution. Any and all acts of the Authorized Officers may be done individually or collectively.

Section 4. ***Reimbursement.*** The County intends that the adoption of this resolution will be a declaration of the County's official intent to reimburse expenditures for the Projects that are to be financed from the proceeds of the Lender financing described above. The County intends that funds that have been advanced, or that may be advanced, from the County's general fund or any other County fund related to the Projects, for project costs may be reimbursed from the financing proceeds.

Section 5. ***Severability.*** If any section, phrase or provision of this Resolution is for any reason declared invalid, such declaration will not affect the validity of the remainder of the sections, phrases or provisions of this Resolution.

Section 6. ***Repealer.*** All motions, orders, resolutions, ordinances and parts thereof in conflict herewith are repealed.

Section 7. ***Effective Date.*** This Resolution is effective on the date of its adoption.

PASSED, ADOPTED AND APPROVED this 11th day of August, 2025.

STATE OF NORTH CAROLINA)
) ss:
COUNTY OF CALDWELL)

I, ABIGAIL I. RICH, Clerk to the Board of Commissioners of the County of Caldwell, North Carolina, ***DO HEREBY CERTIFY*** that the foregoing is a true and exact copy of a resolution entitled "**RESOLUTION OF THE COUNTY OF CALDWELL, NORTH CAROLINA APPROVING AN INSTALLMENT FINANCING AGREEMENT TO FINANCE VEHICLES AND EQUIPMENT AND DELIVERY THEREOF AND PROVIDING FOR CERTAIN OTHER RELATED MATTERS**" adopted by the Board of Commissioners of the County of Caldwell, North Carolina at a meeting held on the 11th day of August, 2025.

WITNESS my hand and the corporate seal of the County of Caldwell, North Carolina, this the 11 day of August, 2025.

Abigail I. Rich
Clerk to the Board of Commissioners
County of Caldwell, North Carolina

A RESOLUTION BY THE COUNTY OF CALDWELL

TO DIRECT THE EXPENDITURE OF OPIOID SETTLEMENT FUNDS

WHEREAS Caldwell County has joined national settlement agreements with companies engaged in the manufacturing, distribution, and dispensing of opioids.

WHEREAS the allocation, use, and reporting of funds stemming from these national settlement agreements and bankruptcy resolutions ("Opioid Settlement Funds") are governed by the Memorandum of Agreement Between the State of North Carolina and Local Governments on Proceeds Relating to the Settlement of Opioid Litigation ("MOA"), the Supplemental Agreement for Additional Funds from Additional Settlements of Opioid Litigation ("SAAF"), and SAAF-2;

WHEREAS Caldwell County has received Opioid Settlement Funds pursuant to these national settlement agreements and deposited the Opioid Settlement Funds in a separate special revenue fund as required by section D of the MOA;

WHEREAS section E.6 of the MOA states that, before spending opioid settlement funds, the local government's governing body must adopt a resolution that:

(i) indicates that it is an authorization for expenditure of opioid settlement funds; and,

(ii) states the specific strategy or strategies the county or municipality intends to fund pursuant to Option A or Option B, using the item letter and/or number in Exhibit A or Exhibit B to identify each funded strategy; and,

(iii) states the amount dedicated to each strategy for a specific period of time.

NOW, THEREFORE BE IT RESOLVED, in alignment with the NC MOA, SAAF, and SAAF-2, Caldwell County authorizes the expenditure of opioid settlement funds as follows:

1. First strategy authorized
    a. Name of strategy: Post-Overdose Response Team
    b. Strategy is included in Exhibit: A
    c. Item letter and/or number in Exhibit A or Exhibit B to the MOA: Exhibit A, Strategy 8
    d. Amount authorized for this strategy: $658,795.00
    e. Period of time during which expenditure may take place:
        Start date July 15, 2025, through End date June 30, 2026
    f. Description of the program, project, or activity: Provide services as a PORT, outlined by the NCDHHS PORT Toolkit. The Caldwell County RESTART PORT will actively connect persons who have experienced non-fatal drug overdoses to addiction/mental health treatment, recovery support, harm reduction services, primary healthcare, and/or other services or supports needed to improve the overall health or well-being.
    g. Provider: Caldwell County RESTART

2. Second strategy authorized
    a. Name of strategy: Evidence-based Addiction Treatment

b. Strategy is included in Exhibit A
c. Item letter and/or number in Exhibit A or Exhibit B to the MOA: Exhibit A, Strategy 2
d. Amount authorized for this strategy: $5,000.00
e. Period of time during which expenditure may take place:
Start date July 15, 2025, through End date June 30, 2026
f. Description of the program, project, or activity: Support evidence-based addiction treatment consistent with the American Society of Addiction Medicine's national practice guidelines for the treatment of opioid use disorder – specifically Medication-Assisted Treatment (MAT) with any medication approved for this purpose by the U.S. Food and Drug Administration – through Opioid Treatment Programs, qualified providers of Office-Based Opioid Treatment, Federally Qualified Health Centers, treatment offered in conjunction with justice system programs, or other community-based programs offering evidence based addiction treatment.
g. Provider: Caldwell County RESTART.

3. Third authorized strategy
a. Name of strategy: Naloxone Distribution
b. Strategy is included in Exhibit A
c. Item letter and/or number in Exhibit A or Exhibit B to the MOA: Exhibit A, Strategy 7
d. Amount authorized for this strategy: $ 20,000
e. Period of time during which expenditure may take place:
Start date July 15, 2025, through End date June 30, 2026
f. Description of the program, project, or activity: Distribute naloxone to persons at risk of overdose or their social networks, through our post-overdose response team, program that provides naloxone to persons upon release from jail. Distribute naloxone to emergency medical service providers to provide naloxone to persons at risk of overdose, or other community-based organizations that provide services to people who use drugs.
g. Provider: Caldwell County RESTART.

4. Fourth authorized strategy
a. Name of strategy: Recovery Support Services
b. Strategy is included in Exhibit A
c. Item letter and/or number in Exhibit A or Exhibit B to the MOA: Exhibit A, Strategy 3
d. Amount authorized for this strategy: $ 82,000.00
e. Period of time during which expenditure may take place:
Start date July 15, 2025, through End date June 30, 2026
f. Description of the program, project, or activity: Fund a Recovery/Treatment Court Coordinator position. Position is responsible for overall administration of the Recovery/Treatment Court Program, including conducting screening/assessment of potential Program candidates and presenting cases for consideration at Team meetings. Reviewing with participants and potential participants the Participation Contract and the Participant Handbook, monitoring collection of Program

evaluation information, progress reports as required by the Recovery/Treatment Court, coordination of Staffing Team meetings, sharing of information among and providing resources to Team members as needed.

g. Provider: Caldwell County RESTART.

The total dollar amount of Opioid Settlement Funds appropriated across the above named and authorized strategies is $765,795.00

Adopted this the ~~11th~~ 14th day of ~~August~~ July AR 2025.

Randy Church, Chairman of the Board
Caldwell County Board of Commissioners

ATTEST:

Abby Rich, NCCCC County Clerk

Calendar Year 2025

Caldwell County Commissioner Modified Meeting Schedule

City-County Chambers
905 West Ave. NW
Lenoir, NC

Date	Day	Time	Meeting
September 22, 2025	Monday	6:00 p.m.	Regular
October 27, 2025	Monday	6:00 p.m.	Regular
November 3, 2025	Monday	6:00 p.m.	Regular
December 1, 2025	Monday	6:00 p.m.	Regular

Adopted by the Caldwell County Board of Commissioners during a duly held meeting on the 11th day of August 2025.

*All meetings will air live on the Caldwell County Government TV channel (Spectrum Channel 190) and may also be viewed anytime by visiting www.caldwellcountync.org

ATTEST:

Abigail Rich, County Clerk

Randy T. Church, Chairman