BOARD OF COMMISSIONERS REGULAR MEETING SEPTEMBER 3, 2024 5:00 PM

Bryant H. Womack Justice & Administration Building 4O Courthouse Street Columbus, NC 28722

1. Call to Order the Regular Meeting - Chairman Yoder.
2. Invocation - Commissioner Moore.
3. Pledge of Allegiance - Chairman Yoder.
4. Approval of Agenda
   A. Items may be added or removed at this time.
5. Consent Agenda
   A. Approval of the August 19, 2024 Public Hearing and Regular Meeting Minutes.
   B. Schedule a public hearing for requested road name changes and readdressing to be considered on Monday, October 7, 2024, at 5:00 p.m. in the R. Jay Foster Hall of Justice, Womack Building.
   C. Tax Refund Request for the months of July and August in the amount of $24,401.97.
6. Citizen Comments on Agenda Items.
7. Regular Agenda Items
   A. North Carolina Office of Emergency Medical Services (NCOEMS) Recognition of Ben Warren - Jeff Powell, NCOEMS Regional Manager.
   B. Recognition in Appreciation of Ben Warren Upon his Retirement from Polk County EMS - Manager Pittman.
   C. Military Suicide Awareness Proclamation - Joyce B. Preston, President Polk County Memorial Auxiliary to VFW Post #9116.
   D. Proclamation for Prisoners of War (POW) and Missing In Action (MIA) - Ethel Collins, Secretary Polk County Memorial Auxiliary to VFW Post #9116.

E. Resolution in Remembrance of September 11, 2001 - Commander Mike Collins.

F. Polk County Veterans Services Update - Gina Cashion, Veterans Services Officer.

G. North Carolina Preparedness Month Proclamation - Bobby Arledge, Emergency Management Director

H. North Carolina Department of Transportation (NCDOT) Agreement to Assume Responsibility of Wolverine Trail and Budget Amendment to bring up to NCDOT Standards - Manager Pittman.

8. Citizen Comments on Non-Agenda Items.

9. Adjournment

POLK COUNTY BOARD OF COMMISSIONERS
Public Hearing and Regular Meeting
August 19, 2024 - 5:00 PM
Bryant H. Womack Justice & Administration Building
Columbus, NC 28722
MINUTES

Present: Chairman Yoder, Vice-Chairman Melton, Commissioner Beiler, Commissioner Moore, and Commissioner Overholt. Also in attendance were County Manager Pittman, County Attorney Berg, Clerk to the Board Tipton, media, and citizens.

1. Public Hearing

   A. Call to Order the Public Hearing - Chairman Yoder. Purpose of the Public Hearing: To receive public comment on the proposed new road name, Blue Ridge Trail. The public hearing was properly advertised in the Tryon Daily Bulletin.

   B. Citizen Comments

   There were none.

   C. Adjoun Public Hearing

   Vice-Chairman Melton moved to adjourn the Public Hearing, seconded by Commissioner Overholt and the motion carried unanimously.

2. Call to Order the Regular Meeting - Chairman Yoder.

3. Invocation - Chairman Yoder.

4. Pledge of Allegiance - Commissioner Moore.

5. Approval of Agenda

   A. Items may be added or removed at this time.

   Vice-Chairman Melton moved to approve the agenda as presented, seconded by Commissioner Moore and the motion carried unanimously.

6. Consent Agenda

   A. Approval of the July 22, 2024 Regular Meeting Minutes.

   B. Schedule a public hearing to take public comments on FY 2026 NCDOT Section 5311 (ADTAP), 5310, 5339, 5307, and applicable State Funding Community Transportation Grants for Monday, September 16, 2024, at 5:00 pm in the R. Jay Foster Hall of Justice, Womack Building.

   C. Vaya Health Quarterly Financial Reports for the period ending June 30, 2024.

D. Sheriffs Department Activity Report for June and July 2024.

Vice-Chairman Melton moved to approve the Consent Agenda, seconded by Commissioner Beiler and the motion carried unanimously.

7. Citizen Comments on Agenda Items.

There were none.

8. Regular Agenda Items

A. Polk County Schools - Brandon Schweitzer, Ed. D., Director of Operations
Public School Building Repair & Renovation Fund (PSBRRF) NC Education Lottery Requests in the amount of $246,671.94.
Local Government Request for Capital Reserve Transfer in the amount of $160,631.

Dr. Schweitzer, Polk County Schools, presented a lottery request for repair and renovations of various capital projects that took place over the summer. He said the NC Department of Public Instruction now asks that these requests be itemized, so there are a total of 16 requests.
Commissioner Moore moved to approve the PSBRRF NC Education Lottery Requests in the amount of $246,671.94, seconded by Vice-Chairman Melton and the motion carried unanimously.

Dr. Schweitzer then presented the Capital Reserve Transfer request for two service vehicles, furniture, and renovations to the concession stand.
Commissioner Beiler moved to approve the Capital Reserve Transfer request in the amount of $160,631, seconded by Commissioner Overholt and the motion carried unanimously.

B. Animal Cruelty Investigators Program Updates - Margo Savage and Patti Lovelace.

Margo Savage gave a presentation, a copy of which is hereby incorporated by reference into these minutes. She also announced that after 20 years of volunteer service, she was retiring as an Animal Cruelty Investigator. Patti Lovelace, Animal Control Officer then presented her with a framed proclamation in honor of her service.

C. Polk County Library Policy Updates - Marcie Dowling, Director.

Marcie Dowling presented the proposed updates to the Library's Safe Child and the Computer Use and Internet Safety Policies. She also presented two new policies, the Maker Equipment and Space Policy, and the Saluda Library Teen Space Agreement.
Commissioner Moore moved to approve the updates as presented, seconded by Vice-Chairman Melton and the motion carried unanimously.

D. Approval of proposed new road name, Blue Ridge Trail (Off SR 1135 Skyuka Rd) Columbus Township.

Commissioner Overholt moved to approve the road name as presented, seconded by Commissioner Moore and the motion carried unanimously.

E. Proposed Easement from Polk County Government to Steps to Hope, Inc. - Attorney Berg.

Attorney Berg presented the proposed easement for ingress and egress to be granted by Polk County to Steps to Hope, Inc. she said Steps to Hope, Inc. will cover the fees involved with the transaction.
Commissioner Overholt moved to grant the easement to Steps to Hope, Inc., seconded by Commissioner Beiler and the motion carried unanimously.

F. Skyrunner/North Carolina Department of Information Technology (NCDIT) Completing Access to Broadband (CAB) Program Memorandum of Understanding (MOU) Budget Amendment - Manager Pittman.

Manager Pittman said the county has been awarded funding from the N.C. Department of Information Technology's (NCDIT) Completing Access to Broadband (CAB) program. He said the evaluation committee recommended awarding the contract to Skyrunner, Inc. because their proposal represented the best value to the state and county among the submitted proposals. Skyrunner proposed serving 2,680 locations with a total project cost of $8,117,499. The award requires a county match of $811,750. Manager Pittman said the county has received funding from the Rural Digital Opportunity Fund (RDOF), Growing Rural Economies with Access to Technology (GREAT) Grant, and now the Completing Access to Broadband (CAB) program. With the match requested, Polk County has appropriated $1,061,750 county dollars to bring in more than $21,000,000 of state and federal funds that will collectively, provide fiber optic capabilities to more than 7,000 homes in the unserved and underserved areas of Polk County. Manager Pittman requested approval of the budget amendment and signatory authority for another future CAB award that may be available.
Commissioner Moore moved to approve the budget amendment in the amount of $811,750 and to grant signatory authority to the County Manager for any future CAB awards , seconded by Commissioner Andre Overholt and the motion carried unanimously

G. Board appointments to the Foothills Humane Society Board of Directors.

It was the consensus of the Board of Commissioners that the three vacant positions on the Foothills Humane Society (FHS) Board of Directors should be filled by a county commissioner, the county manager and the sheriff.
Vice-Chairman Melton moved to appoint County Manager Pittman, Sheriff Wright, and Commissioner Moore to serve on the FHS Board of Directors. Commissioner Overholt seconded, and the motion carried with Commissioner Moore abstaining.

9. Citizen Comments on Non-Agenda Items.

There was one comment on a non-agenda item.

10. Volunteer Board Applications

    A. Applications for Consideration: Animal Control Board - Anita Williamson. Animal Cruelty Investigators - Taylor Lampert, Sarah McDonald, Jeanne Peters, Paula Spinale. Board of Adjustment - Paul Weidman. FRAC Committee - Pat Linnon. Harmon Field Board of Supervisors - Warren Watson. Mental Health Advisory Board - Lora Collier. Recreation Advisory Board - Graham Caparulo, Amy Emery, Hannah O'Brien.

    Vice-Chairman Melton moved to approve the applicants as presented, seconded by Commissioner Overholt and the motion carried unanimously.

11. Commissioner Comments.

    The commissioners collectively thanked those in attendance.

12. Adjournment

Attest:

Kristy A Tipton
Clerk to the Board

POLK COUNTY BOARD OF COMMISSIONERS

Myron Yoder
Chairman

BOARD OF COMMISSIONERS
AGENDA ITEM REPORT

MEETING DATE

September 3, 2024

AGENDA ITEM # 5.B

Schedule a public hearing for requested road name changes and readdressing to be considered on Monday, October 7, 2024, at 5:00 p.m. in the R. Jay Foster Hall of Justice, Womack Building.

ATTACHMENTS

None

BOARD OF COMMISSIONERS
AGENDA ITEM REPORT

MEETING DATE

September 3, 2024

AGENDA ITEM # 5.C

Tax Refund Request for the months of July and August in the amount of $24,401.97.

ATTACHMENTS

1. Tax Refund Request July
2. Tax Refund Requests August

Memorandum

To: Polk County Board of Commissioners

From: Melissa O'Loughlin, Polk County Tax Administrator

Date: 7/31/2024

Re: Refund Request

Taxpayer	Parcel	Amount	Reason
McPartland Michael	Vehicle	$115.22	Vehicle Sold-Tag Turned In

TOTAL: **$115.22**

Memorandum

To: Polk County Board of Commissioners

From: Melissa O'Loughlin, Polk County Tax Administrator

Date: 8/27/2024

Re: Refund Request

Taxpayer	Parcel	Amount	Reason
Susan Doring	P51-43	$2,284.46	Written Request-Overpayment
Archibald Hardy	S9-B7	$102.56	Written Request-Double Billed
Corelogic	P45-94-A02	$685.19	Written Request-Incorrect Parcel Paid
Corelogic	P48-20, P13-20, P67-4, P95-73, C1-A6, P108-16	$ 8,260.90	Double Payment- Customer paid before Mortgage Co.
US Bancorp Service Providers	P74-185	$ 1,483.04	Double Payment- Customer paid before Mortgage Co.
Lereta LLC	P122-31	$ 2,289.35	Double Payment- Customer paid before Mortgage Co.
State Employees Credit Union Escrow	P129-48	$ 1,014.76	Double Payment- Customer paid before Mortgage Co.
Chase Bank	P52-164	$ 270.73	Double Payment- Customer paid before Mortgage Co.
First Citizens Mortgage SVC	P31-51, P98-105	$ 6,858.13	Double Payment- Customer paid before Mortgage Co.
Rocket Mortgage LLC	P55-228	$ 178.17	Written Request- Incorrect Parcel Paid
Morketter Michael J/ Morketter Ann C	P29-176, P29-57	$ 393.72	Double Payment- Law Firm paid before customer
Owens John	Vehicle	$ 465.74	Vehicle Sold-Tag turned in
Shehan Lisha	Vehicle	$ 271.99	Vehicle Sold-Tag turned in
Ulmer Ephraim	P25-237	$ 1,661.25	Overpayment- Customer paid multiple parcels and one was already paid in full by mortgage co.
	TOTAL:	**$24,286.75**	

MILITARY SUICIDE AWARENESS

September 2024

PROCLAMATION

WHEREAS, in recent years, military suicides have reached numbers "four times" higher than that of combat deaths; and is up double over the last few years

WHEREAS, more female veterans are committing suicide than ever before.

WHEREAS, the VA estimates that a Veteran commits suicide every eighty-four minutes. That's 17 per day, 7,000 suicides a year, and 19% of all American suicides

WHEREAS, the ***"America's Warrior Partnership"*** and the ***"Department of Defense"*** conclude that the Veteran's Administration is incorrect and that their conclusion is 24 Veterans take their life a day. That is one every hour of the day.

WHEREAS, frequent deployments, stress of combat and prolonged separation from families have increased strain on military personnel and their families; and

WHEREAS, the actions in the World at this time and the 23rd anniversary of 9/11 approaching, some Veterans may question the meaning of their service or whether it was worth the sacrifices they made. Others may feel moral distress about experiences they had during their service. **It's entirely normal for them to feel this way, and they are not alone.**

WHEREAS, military personnel are reluctant to ask for help when they are depressed; and untreated depression is the number one cause of suicide among military personnel; and

WHEREAS, military personnel are encouraged to seek help to restore balance in their lives, as well as the lives of their families by engaging in stress relief activities, maintaining a buddy system of support so that *no soldier stands alone*, remembering the importance of self-care by engaging in activities that improve state of mind, asking for help from a professional, being aware that help is available through a variety of sources, including the Veterans Administration and Suicide Prevention hot-lines; and

WHEREAS, The Polk County Commissioners joins the Polk County Memorial VFW Post #9116 and the Auxiliary in urging all active and former military personnel and their families to seek help for behavior health issues.

NOW, THEREFORE, I, Myron Yoder, Chairman of the Polk County Commissioner, do hereby declare September 2024 as "MILITARY SUICIDE AWARENESS MONTH", and 11th September as "MILITARY SUICIDE DAY" and commends its observance to all citizens.

This the 3th day of September, 2024.

_____
Myron Yoder, Chair – Polk Co. Board of Commissioners

_____
Commander – Polk County Memorial VFW Post #9116 – Columbus Post

_____
President – Polk County Memorial VFW Auxiliary to VFW Post #9116 – Columbus Post

ATTEST:

_____
Kristy A. Tipton, Clerk to the Board

PROCLAMATION

POW/MIA RECOGNITION DAY

September 2024

In every conflict in which our Nation has been involved, selfless American service members have sacrificed their lives for the sake of our country and its principles. Too many have never come home, or have endured unthinkable hardship as prisoners of war. During this month and on this day, we echo the creed inscribed on the black and white banners that fly in honor of America's Prisoners of War and Missing in Action, and we renew our promise to our heroes, that "You Are Not Forgotten."

We will never give up the search for those who are held as prisoners of war or have gone missing under our country's flag. We honor their sacrifice, and we must care for their families and pursue the fullest possible accounting for all missing members of our Armed Forces. Together, we must serve our Nation's patriots as well as they have served us by supporting them when they come home, and by carrying on the legacy of those who do not. This is a promise we keep for our fallen, for our veterans past and present, and for all those whose loved ones have not returned from the battlefield.

On 20 September, 2024 the stark black and white banner symbolizing America's Missing in Action and Prisoners of War will be flown over the Polk County Court House, in Columbus, NC, the County Seat, the Polk County Veterans Brick Memorial, United States post offices, and other locations across our County. We raise this flag as a solemn reminder of our obligation to always remember the sacrifices made to defend our Nation.

NOW, THEREFORE BE IT RESOLVED that the Polk County Memorial Veterans Of Foreign Wars & Auxiliary to Post #9116 request that the Board of Commissioners do hereby proclaim September 2024 as Polk County POW/MIA Month, and 20 September 2024, as Polk County POW/MIA Recognition Day, and we urge all Polk County citizens to observe this day of honor and remembrance with appropriate ceremonies and activities.

IN WITNESS WHEREOF, we have hereunto set our hands this third day of September, 2024.

_____
Chair – Polk County Board of Commissioners

_____
Commander – Polk County Memorial VFW Post #9116 – Columbus Post

_____
President – Polk County Memorial Auxiliary to VFW Post #9116 – Columbus Post

ATTEST:

_____
Kristy A. Tipton, Clerk to the Board

RESOLUTION
IN REMEMBRANCE OF SEPTEMBER 11, 2001
11 September 2024

WHEREAS, the Polk County Board of Commissioners is in support of the United States Senate regarding the coming together as a Nation and ceasing all work or other activity for a moment of remembrance beginning at 1:00 pm Eastern Daylight Time on September 11, 2024, in honor of the 23rd anniversary of the terrorist attacks committed against the United States on September 11, 2001; and

WHEREAS, four civilian aircraft were hijacked on September 11, 2001, and deliberately crashed in New York, Pennsylvania and Washington, D.C., resulting in the loss of nearly 3,000 innocent lives; and

WHEREAS, countless fire departments, police departments, first responders, government officials, civilian workers, emergency medical personnel and volunteers responded immediately and heroically to these horrific events, many suffering fatalities in their rescue efforts; and

WHEREAS, the Polk County Board of Commissioners and the Polk County Memorial VFW & Auxiliary to Post #9116 do hereby salute the American citizens who responded to these tragic events with courage, selfless compassion, determination, and skill, both on September 11, 2001, and in the intervening twenty-three years; and

WHEREAS, a decade later the people of the United States and around the world continue to mourn the tremendous loss of innocent life on that fateful day, and their lives are forever changed as a result of this unprecedented threat to the American way of life; and

WHEREAS, on the 23rd anniversary of this tragic day, the citizens of Polk County join the Polk County Memorial VFW Post #9116 and the Auxiliary, their fellow Americans, and people around the world, in remembrance of the victims of the attacks on September 11, 2001, and their thoughts are with the families and those left behind; and

NOW, THEREFORE, BE IT RESOLVED, that the Polk County Board of Commissioners hereby recognizes September 11, 2024, as a day of solemn remembrance of the terrorist attacks on September 11, 2001; honors the heroic service, actions and sacrifices of the first responders and countless others who bravely risked and likewise often gave their lives during the rescue efforts; and offers its deepest and most sincere condolences to the families, friends and loved ones of the victims of the September 11, 2001, terrorist attacks.

Adopted this 3th day of September, 2024.

POLK COUNTY BOARD OF COMMISSIONERS

ATTEST:

Myron Yoder
Chairman

Kristy Tipton
Clerk to the Board

POLK COUNTY MEMORIAL VFW & AUXILIARY TO POST #9116

Michael Collins
Post Commander

Joyce B. Preston
Auxiliary President

POLK COUNTY VETERANS SERVICES PRESENTS

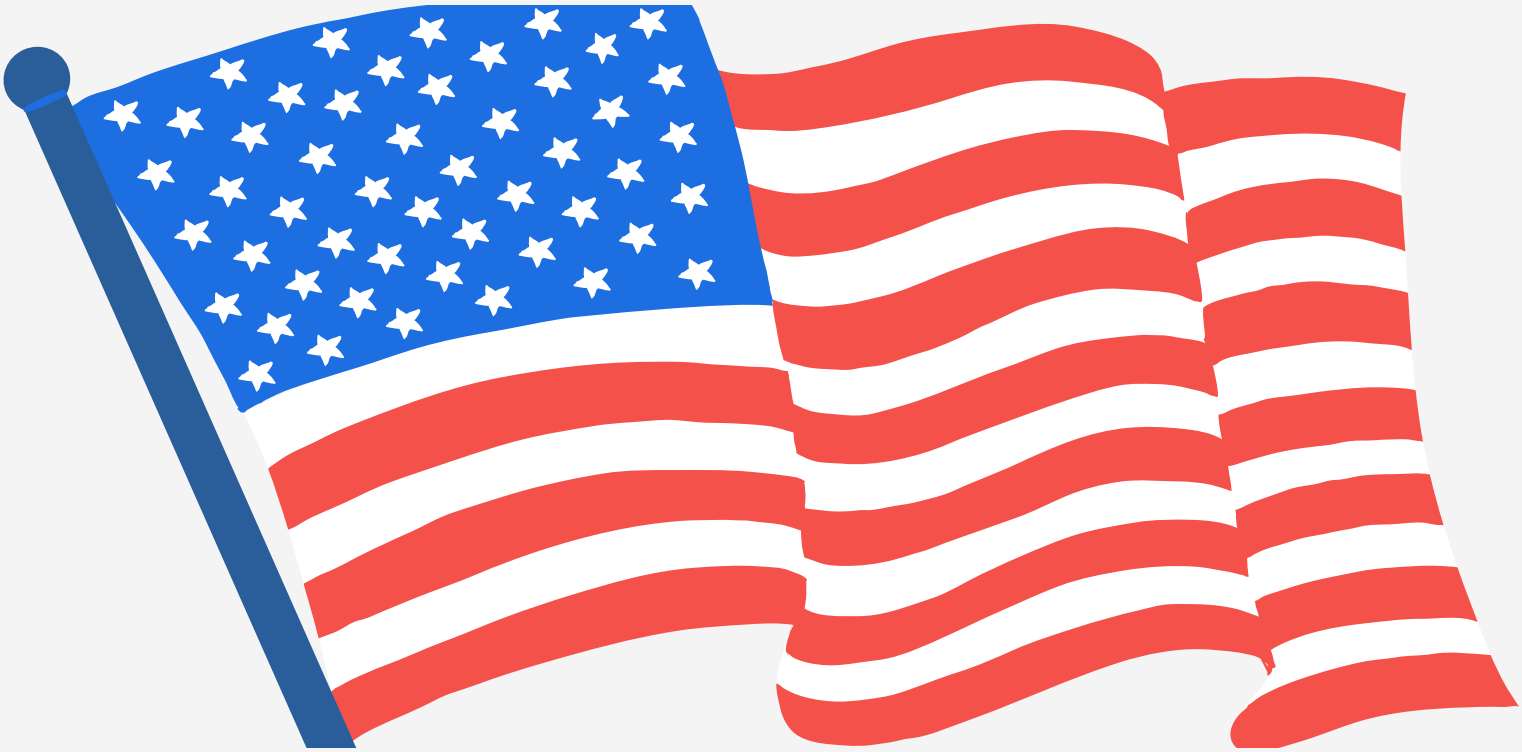

VETERANS & FIRST RESPONDERS

BREAKFAST

All Veterans and First Responders are invited to a free breakfast on September 13, 2024, at 9:00am.

SEP	THE MEETING PLACE	FRIDAY
13	75 CARMEL LN, COLUMBUS, NC 28722	9:00
2024	PLEASE RSVP: 828-894-0003	A.M.

POLK COUNTY PREPAREDNESS MONTH 2024

A PROCLAMATION

WHEREAS, all North Carolinians should be prepared for natural and man-made disasters as well as disease outbreaks; and

WHEREAS, North Carolina is traditionally an active state for tornadoes and severe thunderstorms, with tornado touchdowns and straight-line winds causing severe damage in parts of the state this year; and

WHEREAS, in 2023 the state experienced 24 tornado touchdowns, 139 flood incidents and 844 severe thunderstorms with damaging wind and hail; and

WHEREAS, last year the National Weather Service in North Carolina issued 51 tornado warnings, 751 severe thunderstorm warnings, and 106 flash flood warnings; and

WHEREAS, communities across the state have borne the impacts from wildfires, severe weather, damaging hail, high winds and flooding; and

WHEREAS, every community, business, family and individual in Polk County must be ready for natural and man-made disasters including tornadoes, flooding, hurricanes and public disturbances that might disrupt normal daily activities; and

WHEREAS, all Polk County residents can take a few simple steps – making a family disaster plan, creating an emergency supply kit and staying informed – to help make preparedness and personal responsibility a priority; and

WHEREAS, Polk County residents should know the risks for their area and plan accordingly, and

WHEREAS, Polk County residents should help the elderly and those who cannot help themselves; and

WHEREAS, Polk County residents should include the safety of their pets and/or livestock in their emergency plans; and

WHEREAS, Polk County, North Carolina Emergency Management and the State of North Carolina have collaborated to recognize September as North Carolina Preparedness Month to encourage Polk County residents to be disaster ready;

NOW THEREFORE, I, Myron Yoder, Chairman, Polk County Board of Commissioners, do hereby proclaim the month of September 2024, as **PREPAREDNESS MONTH**" in Polk County, and encourage all county residents to plan and prepare weather-related and man-made disasters by assembling their emergency supply kits and updating their emergency plans.

Adopted this 3th day of September, 2024.

POLK COUNTY BOARD OF COMMISSIONERS

_____
Myron Yoder
Chairman

ATTEST:

_____
Kristy Tipton
Clerk to the Board

ACCOUNTS RECEIVABLE
DOT CONSTRUCTS/INSTALLS
1000022796

AGREEMENT OVERVIEW

NORTH CAROLINA
POLK COUNTY

DATE: 8/15/2024

PARTIES TO THE AGREEMENT:

NORTH CAROLINA DEPARTMENT OF TRANSPORTATION

AND

POLK COUNTY

PROJECT NUMBERS:

WBS ELEMENTS: **36249.4898**

The purpose of this Agreement is to identify the participation in project costs, project delivery and/or maintenance, by the other party to this Agreement, as further defined in this Agreement.

SCOPE OF PROJECT ("Project"): This Project consists of the purchasing and installation of guardrail, pavement markings, and minor concrete drainage repair of the Wolverine Trail from NC 108 to Silver Creek Road in Polk County.

ESTIMATED COST TO OTHER PARTY: $75,000
ESTIMATED COST OF THE PROJECT: $75,000

PAYMENT TERMS: Polk County will submit payment upon execution of agreement.

MAINTENANCE: Department

EFFECTIVE DATES OF AGREEMENT:
START: Upon Full Execution of this Agreement
END: When work is complete and all terms are met.

This **Agreement** is made and entered into on the last date executed below, by and between the North Carolina Department of Transportation, an agency of the State of North Carolina, hereinafter referred to as the **Department** and **Polk County Local Government**, hereinafter referred to as the **County**; and collectively referred to as the **Parties**.

The **Parties** to this Agreement, listed above, intend that this Agreement, together with all attachments, schedules, exhibits, and other documents that both are referenced in this Agreement and refer to this Agreement, represents the entire understanding between the **Parties** with respect to its subject matter and supersedes any previous communication or agreements that may exist.

I. WHEREAS STATEMENTS

WHEREAS, this Agreement is made under the authority granted to the **Department** by the North Carolina General Assembly under General Statutes of North Carolina (NCGS), particularly Chapter 136-66.1 and 136-66.3; and,

WHEREAS, the **Department** and the **County** have agreed that the jurisdictional limits of the **Parties**, as of the date of entering the agreement for the above-mentioned project, are to be used in determining the duties, responsibilities, rights, and legal obligations of the **Parties** hereto for the purposes of this Agreement; and,

WHEREAS, the **County** has requested that the **Department** to perform work as stated in the scope; and,

WHEREAS, the **Parties** hereto wish to enter into an agreement for scoped work to be performed or provided by the **Department** (including reviews, goods, or services) with reimbursement for the costs thereof by the **County** as hereinafter set out; and,

NOW, THEREFORE, this Agreement states the promises and undertakings of each party as herein provided, and the **Parties** do hereby covenant and agree, each with the other, as follows:

II. RESPONSIBILITIES

A. DEPARTMENT

The **Department** shall be responsible for all phases of project delivery to include planning, design, right of way acquisition, utility relocation, construction and maintenance as shown in the **PROJECT DELIVERY** Provision.

B. COUNTY

The **County** shall be responsible for payment as shown in the **COSTS AND FUNDING** Provision.

III. PROJECT DELIVERY REQUIREMENTS

A. PRELIMINARY ENGINEERING AND CONSTRUCTION

i. The **Department** will be responsible for preparing the environmental and/or planning document, obtaining any environmental permits, and preparing the project plans and specifications.

ii. The **Department** shall construct the Project in accordance with the plans and specifications for the Project. The **Department** shall administer the construction contract

for said Project. All work shall be done in accordance with Departmental standards, specifications, policies, and procedures.

B. RIGHT OF WAY ACQUISITION

It is understood by all **Parties** hereto that all work shall be contained within existing right of way or easements previously granted. If additional right of way is needed, the **County** will provide the required right of way and/or construction easements at no cost or liability whatsoever to the **Department**. Acquisition of right of way shall be accomplished in accordance with State procedures and the North Carolina Right of Way Manual. The **County** shall remove from said right of way all obstructions and encroachments of any kind or character (including hazardous and contaminated materials). The **County** shall indemnify and save the **Department** harmless from any and all claims for damages that might arise on account of damage to public or private property and right of way acquisition, drainage, and construction easements for the construction of the project.

C. MAINTENANCE

Upon completion of the Project:

i. The **Department** shall be responsible for the guardrail, pavement markings, drainage.

ii. The **Department** shall be responsible for all traffic operating controls and devices which shall be established, enforced, and installed and maintained in accordance with the North Carolina General Statutes, the latest edition of the Manual on Uniform Traffic Control Devices for Streets and Highways, the latest edition of the "Policy on Street and Driveway Access to North Carolina Highway," and department criteria.

iii. The roadway improvements that are within state-owned right of way shall be considered a part of the State Highway System and shall be owned and maintained by the **Department**.

IV. COSTS AND FUNDING

A. PROJECT COSTS

i. The estimated cost of the Project is $75,000. Both **Parties** recognize that this is an estimated cost and is subject to change.

ii. The **County** shall reimburse the **Department** 100% of the actual cost of all work performed by the **Department**, including administrative costs.

B. PAYMENT BY THE OTHER PARTY

i. Based on the estimated cost, the **County** shall submit a down payment for $75,000 to the Department's Fiscal Section upon full execution of this Agreement, in accordance with the attached "Remittance Guidance".

ii. Upon completion of the Project, if actual costs exceed the amount of payment, the **County** shall reimburse the **Department** any underpayment within sixty (60) days of invoicing by the **Department**. The **Department** will charge a late payment penalty and interest on any unpaid balance due in accordance with G. S. 147-86.23. If the actual cost of the work is less than $75,000, the **Department** will reimburse the **County** any overpayment.

C. DOWN PAYMENT OR PRE-PAYMENT

i. Any down payments are due at the time the agreement is fully executed.

ii. At any time prior to final billing by the **Department**, the **County** may prepay any portion of the estimated cost by sending payment in accordance with the attached "Remittance Guidance". The **Department** will provide a final billing based on the fixed cost, less any previous payments that have been made.

V. STANDARD PROVISIONS

A. AGREEMENT MODIFICATIONS

Any modification to scope, funding, responsibilities, or time frame will be agreed upon by all **Parties** by means of a written Supplemental Agreement.

B. ASSIGNMENT OF RESPONSIBILITIES

The **Department** must approve any assignment or transfer of the responsibilities of the **County** set forth in this Agreement to other parties or entities.

C. AGREEMENT FOR IDENTIFIED PARTIES ONLY

This Agreement is solely for the benefit of the identified **Parties** to the Agreement and is not intended to give any rights, claims, or benefits to third parties or to the public at large.

D. OTHER AGREEMENTS

The **County** is solely responsible for all agreements, contracts, and work orders entered into or issued by the **County** to meet the terms of this Agreement. The **Department** is not responsible for any expenses or obligations incurred for the terms of this Agreement except those specifically eligible for the funds and obligations as approved by the **Department** under the terms of this Agreement.

E. TITLE VI

The other party to this Agreement shall comply with Title VI of the Civil Rights Act of 1964 (Title 49 CFR, Subtitle A, Part 21) and related nondiscrimination authorities. Title VI and related authorities prohibit discrimination on the basis of race, color, national origin, disability, gender, and age in all programs or activities of any recipient of Federal assistance.

F. FACSIMILE

A copy or facsimile copy of the signature of any party shall be deemed an original with each fully executed copy of the Agreement as binding as an original, and the **Parties** agree that this Agreement can be executed in counterparts, as duplicate originals, with facsimile signatures sufficient to evidence an agreement to be bound by the terms of the Agreement.

G. AUTHORIZATION TO EXECUTE

The **Parties** hereby acknowledge that the individual executing this Agreement has read this Agreement, conferred with legal counsel, fully understands its contents, and is authorized to execute this Agreement and to bind the respective **Parties** to the terms contained herein.

H. DEBARMENT POLICY

It is the policy of the **Department** not to enter into any agreement with parties that have been debarred by any government agency (Federal or State). By execution of this agreement, the **County** certifies that neither it nor its agents or contractors are presently debarred, suspended, proposed for debarment, declared ineligible or voluntarily excluded from participation in this transaction by any Federal or State Agency or Department and that it will not enter into agreements with any entity that is debarred, suspended, proposed for debarment, declared ineligible or voluntarily excluded from participation in this transaction.

I. INDEMNIFICATION

To the extent authorized by state and federal claims statutes, the **County** shall be responsible for its actions under the terms of this agreement and save harmless the FHWA (if applicable), the **Department**, and the State of North Carolina, their respective officers, directors, principals, employees, agents, successors, and assigns from and against any and all claim for payment, damages and/or liabilities of any nature, asserted against the **Department** in connection with this Agreement. The **Department** shall not be liable and shall be held harmless from any and all third-party claims that might arise on account of the **County's** negligence and/or responsibilities under the terms of this agreement.

J. AVAILABILITY OF FUNDS

All terms and conditions of this Agreement are dependent upon, and, subject to the allocation of funds for the purpose set forth in the Agreement and the Agreement shall automatically terminate if funds cease to be available.

K. DOCUSIGN

The **Department** and the **County** acknowledge and agree that the electronic signature application DocuSign may be used, at the sole election of the **Department** or the **County**, to execute this Agreement. By selecting "I Agree", "I Accept", or other similar item, button, or icon via use of a keypad, mouse, or other device, as part of the DocuSign application, the **Department** and the **County** consent to be legally bound by the terms and conditions of Agreement and that such act constitutes the **Department's** signature as if actually signed by the **Department** in writing or the **County's** signature as if actually signed by the **County** in writing. The **Department** and the **County** also agree that no certification authority or other third-party verification is necessary to validate its electronic signature and that the lack of such certification or third-party verification will not in any way affect the enforceability of its electronic signature. The **Department** and the **County** acknowledge and agree that delivery of a copy of this Agreement or any other document contemplated hereby through the DocuSign application, will have the same effect as physical delivery of the paper document bearing an original written signature.

L. GIFT BAN

By Executive Order 24, issued by Governor Perdue, and NCGS 133-32, it is unlawful for any vendor or contractor (i.e. architect, bidder, contractor, construction manager, design professional, engineer, landlord, offeror, seller, subcontractor, supplier, or vendor), to make gifts or to give favors to any State employee of the Governor's Cabinet Agencies (i.e. Administration, Adult Corrections, Commerce, Environmental Quality, Health and Human Services, Information Technology, Military and Veterans Affairs, Natural and Cultural Resources, Public Safety, Revenue, Transportation, and the Office of the Governor).

SIGNATURE PAGE

IN WITNESS WHEREOF, this Agreement has been executed the day and year heretofore set out, on the part of the **Department** and the **County** by authority duly given.

(DOCUSIGN ONLY)

Authorized Signer: _____

Print Name: _____

Title: _____

Date Signed: _____

If applicable, this Agreement has been pre-audited in the manner required by the Local Government Budget and Fiscal Control Act:

POLK COUNTY

FED TAX ID NO: _____

REMITTANCE ADDRESS:

_____

_____

Finance Officer: _____

Print Name: _____

Date Signed: _____

DEPARTMENT OF TRANSPORTATION

BY: _____

TITLE: _____

DATE: _____

APPROVED BY BOARD OF TRANSPORTATION ITEM O: _____ (DATE)

SIGNATURE PAGE

IN WITNESS WHEREOF, this Agreement has been executed the day and year heretofore set out, on the part of the **Department** and the **County** by authority duly given.

(INK SIGNATURES ONLY)

ATTEST:

BY: _____

TITLE: _____

Authorized Signer: _____

Print Name: _____

Title: _____

Date Signed: _____

If applicable, this Agreement has been pre-audited in the manner required by the Local Government Budget and Fiscal Control Act:

POLK COUNTY

FED TAX ID NO: _____

REMITTANCE ADDRESS:

_____

_____

Finance Officer: _____

Print Name: _____

Date Signed: _____

DEPARTMENT OF TRANSPORTATION (DocuSign)

BY: _____

TITLE: _____

DATE: _____

APPROVED BY BOARD OF TRANSPORTATION ITEM O: _____ (DATE)

N.C. DEPARTMENT OF TRANSPORTATION

DIVISION OF HIGHWAYS

SECONDARY ROAD SURVEY

SUBJECT: Wolverine Trail (Road Addition)
LOCATION: Begin at the intersection of NC108 and Wolverine Trail, and continue in a North-Westerly direction for a total of 3105 feet. End of project at intersection of Wolverine Trail and SR1138 (Silver Creek Road).
WORK TYPE: Road Addition
WORK ORDER: 14C.207511 PRIORITY:
COUNTY: Polk TOWNSHIP: Mill Spring
DATE: May 31, 2019 SCALE: 1"=50'
NOTES: 60' R/W Current ADT Bracket 0-1200
R/W Adjustments Requested Design ADT Bracket 0-1600
Water: South Branch/Little White Oak Creek
Prepared By: BGS

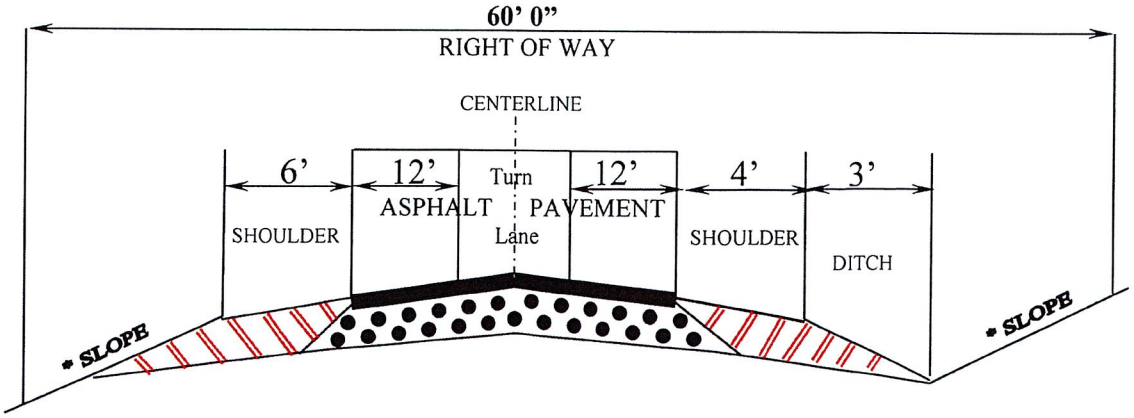

MAX SLOPE

FILL 1½:1
CUT 1:1

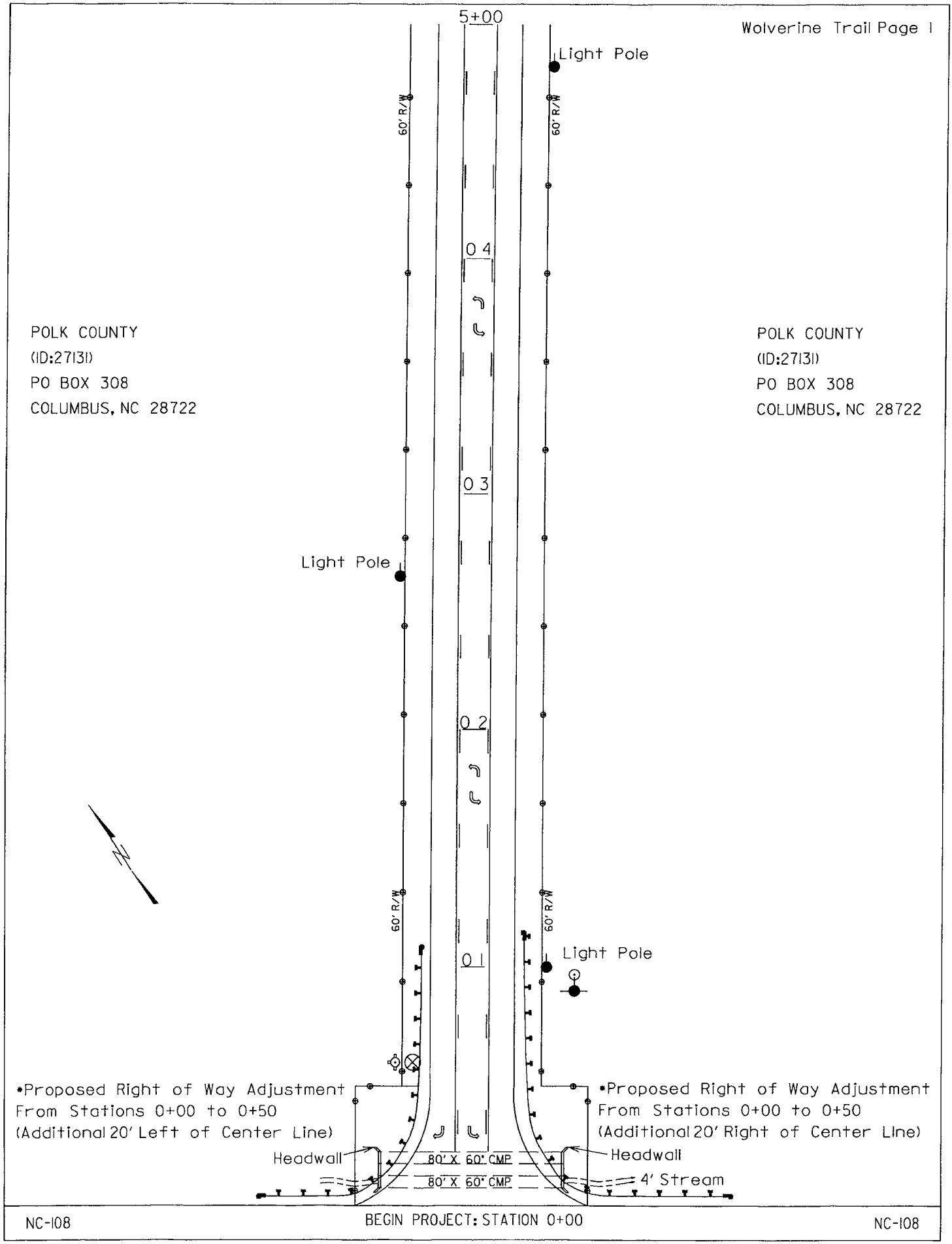

POLK COUNTY
(ID:27131)
PO BOX 308
COLUMBUS, NC 28722

POLK COUNTY
(ID:27131)
PO BOX 308
COLUMBUS, NC 28722

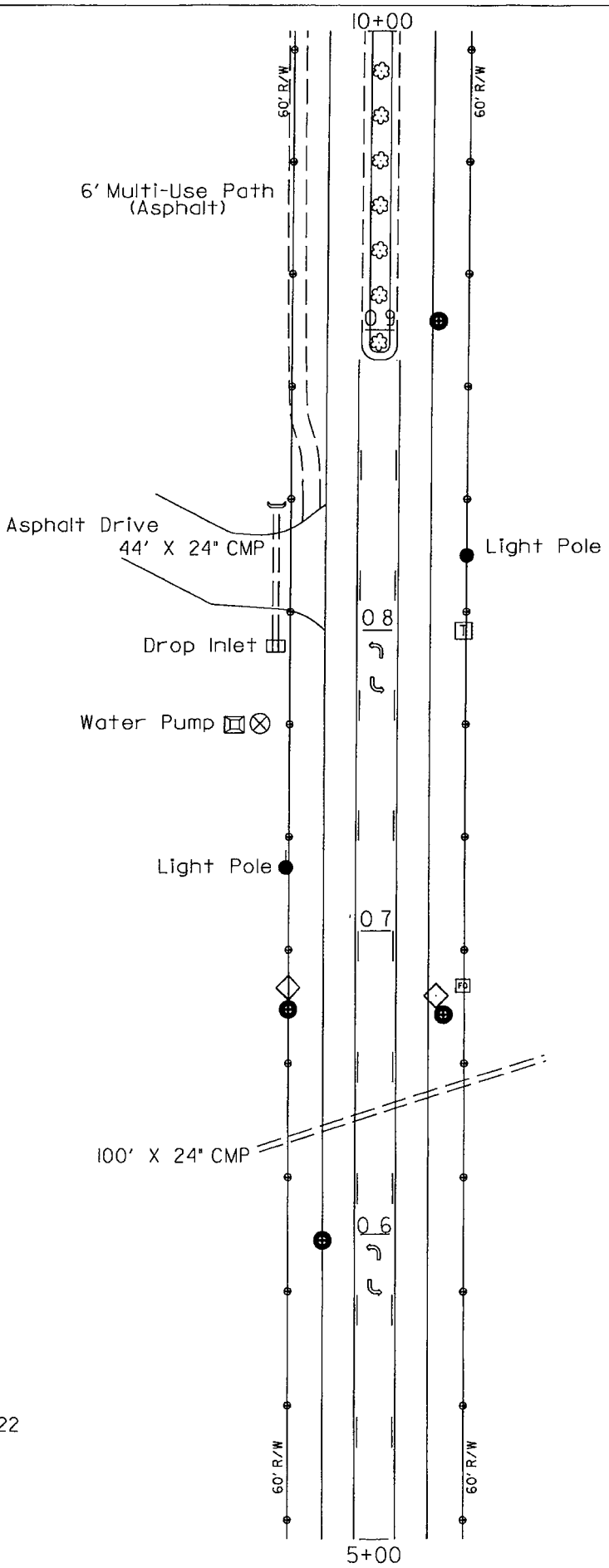

POLK COUNTY
(ID:27131)
PO BOX 308
COLUMBUS, NC 28722

POLK COUNTY
(ID:27131)
PO BOX 308
COLUMBUS, NC 28722

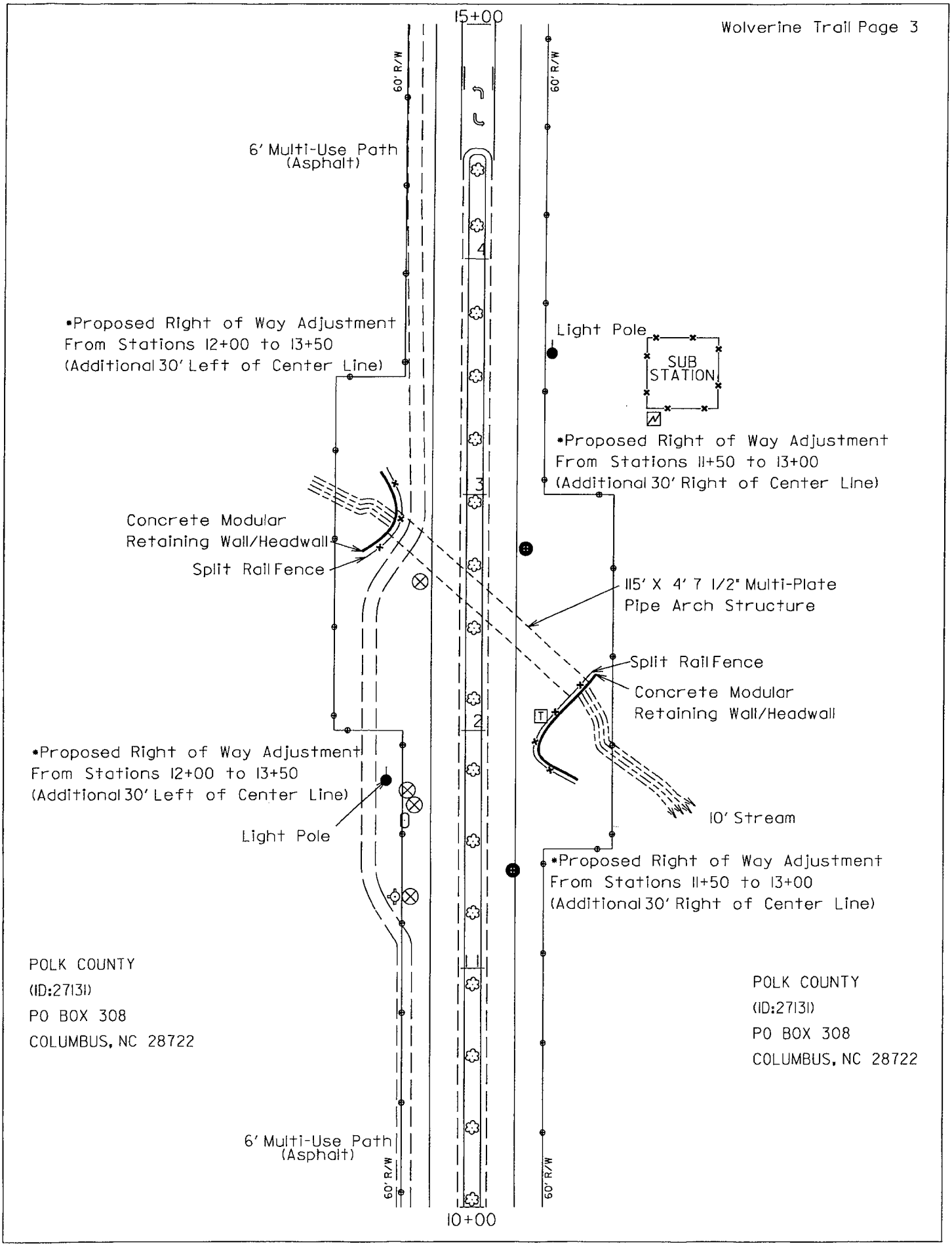
15+00
60' R/W
60' R/W
6' Multi-Use Path
(Asphalt)
*Proposed Right of Way Adjustment
From Stations 12+00 to 13+50
(Additional 30' Left of Center Line)
Light Pole
SUB
STATION
*Proposed Right of Way Adjustment
From Stations 11+50 to 13+00
(Additional 30' Right of Center Line)
Concrete Modular
Retaining Wall/Headwall
Split Rail Fence
115' X 4' 7 1/2" Multi-Plate
Pipe Arch Structure
Split Rail Fence
Concrete Modular
Retaining Wall/Headwall
*Proposed Right of Way Adjustment
From Stations 12+00 to 13+50
(Additional 30' Left of Center Line)
Light Pole
10' Stream
*Proposed Right of Way Adjustment
From Stations 11+50 to 13+00
(Additional 30' Right of Center Line)
POLK COUNTY
(ID:27131)
PO BOX 308
COLUMBUS, NC 28722
POLK COUNTY
(ID:27131)
PO BOX 308
COLUMBUS, NC 28722
6' Multi-Use Path
(Asphalt)
60' R/W
60' R/W
10+00

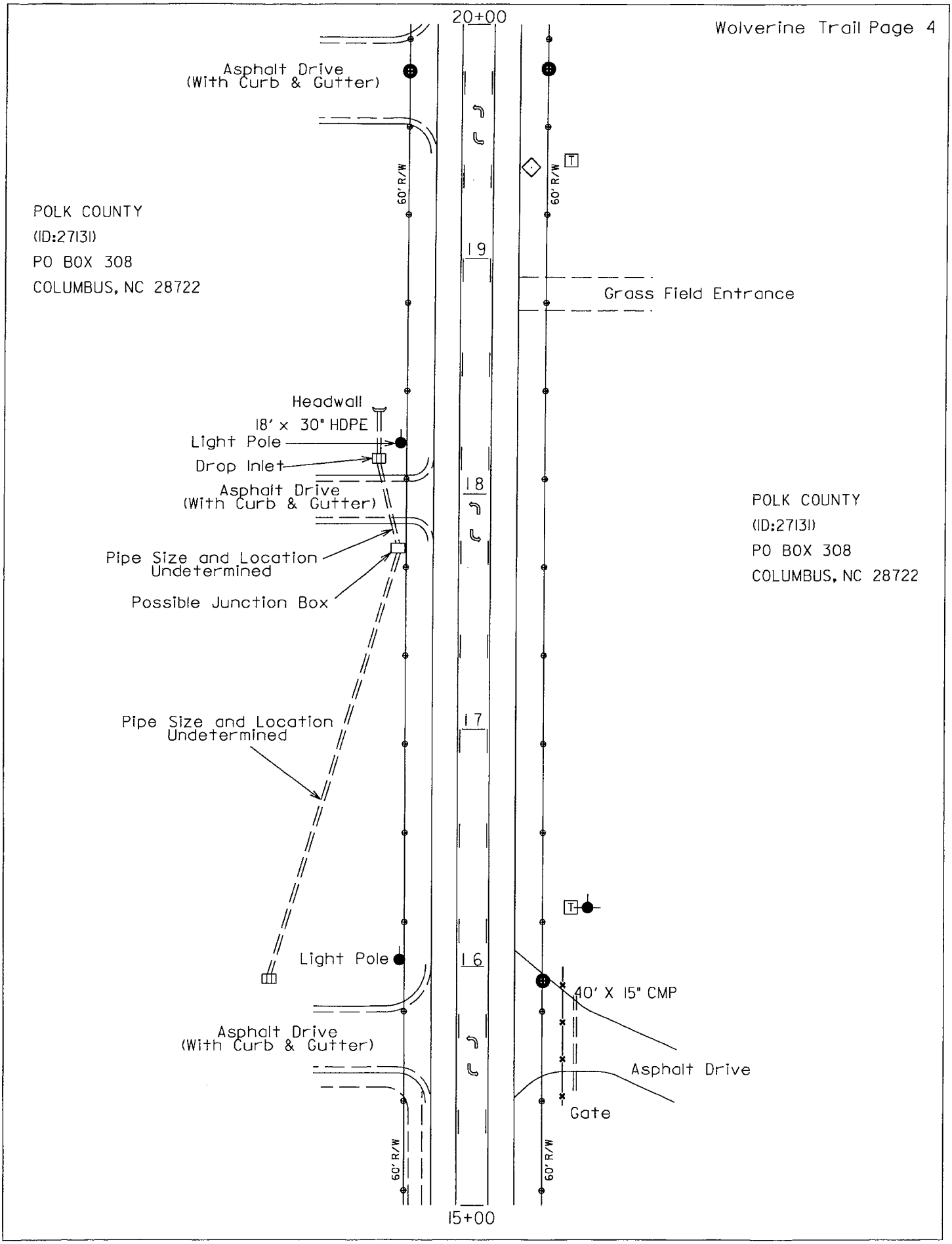
20+00
Asphalt Drive
(With Curb & Gutter)
60' R/W
POLK COUNTY
(ID:27131)
PO BOX 308
COLUMBUS, NC 28722
19
Grass Field Entrance
Headwall
18' x 30" HDPE
Light Pole
Drop Inlet
Asphalt Drive
(With Curb & Gutter)
18
Pipe Size and Location
Undetermined
Possible Junction Box
POLK COUNTY
(ID:27131)
PO BOX 308
COLUMBUS, NC 28722
Pipe Size and Location
Undetermined
17
Light Pole
16
40' X 15" CMP
Asphalt Drive
(With Curb & Gutter)
Asphalt Drive
Gate
60' R/W
15+00

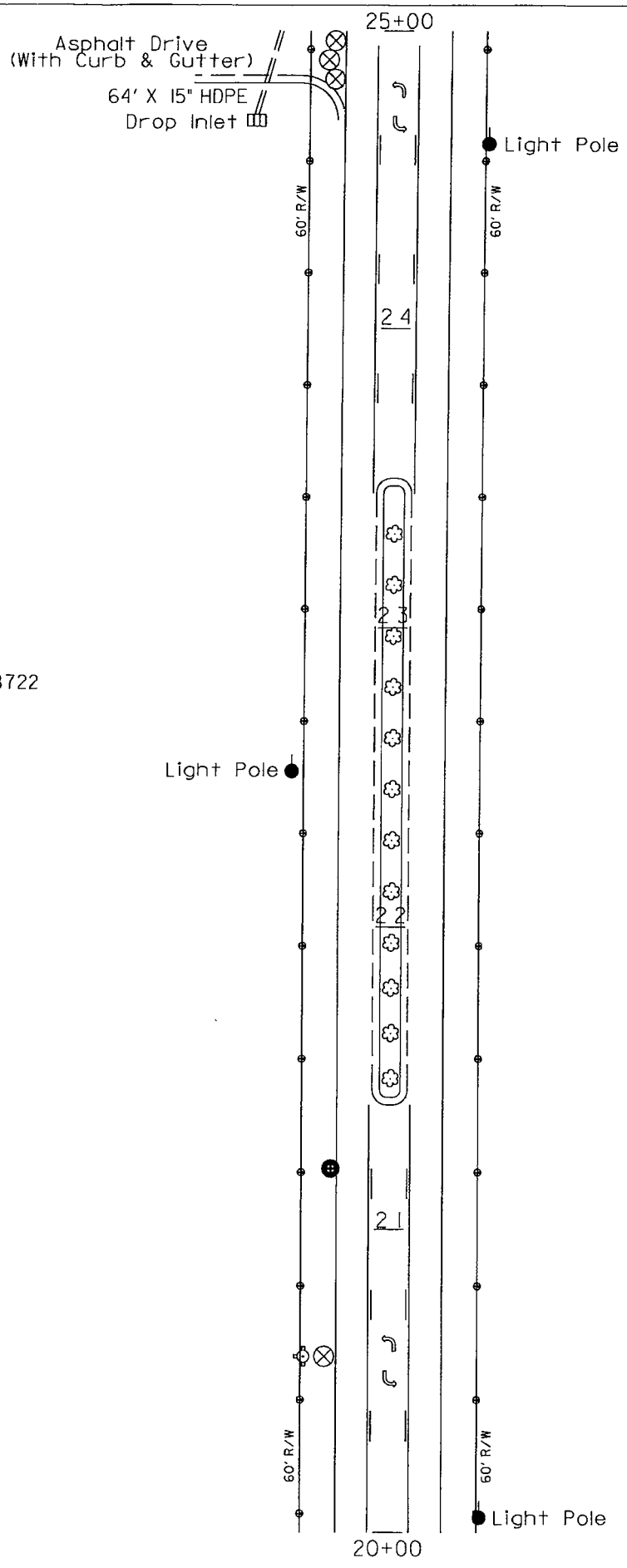

POLK COUNTY
(ID:27131)
PO BOX 308
COLUMBUS, NC 28722

POLK COUNTY
(ID:27131)
PO BOX 308
COLUMBUS, NC 28722

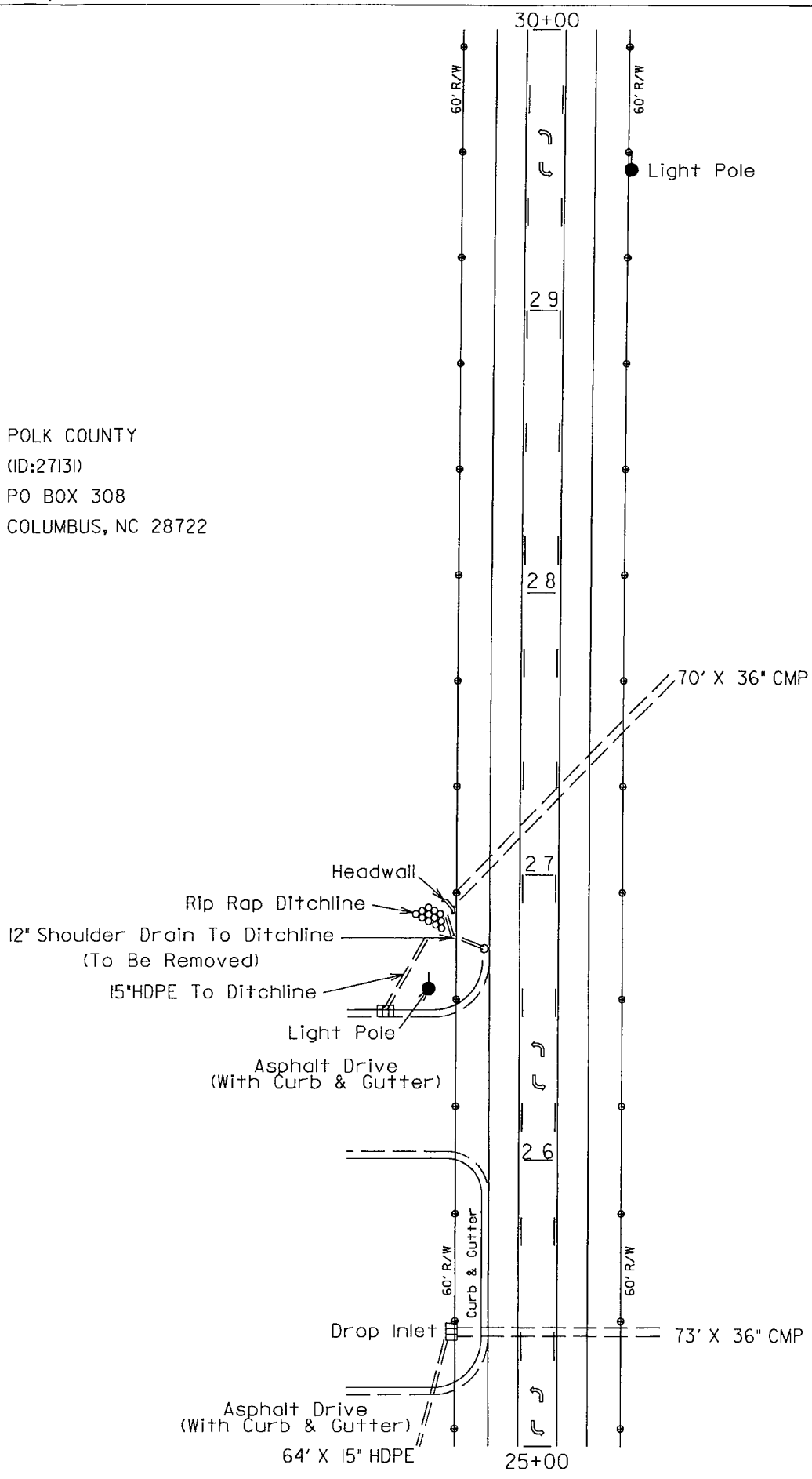

POLK COUNTY
(ID:27131)
PO BOX 308
COLUMBUS, NC 28722

POLK COUNTY
(ID:27131)
PO BOX 308
COLUMBUS, NC 28722

SR 1138 SILVER CREEK ROAD

END PROJECT: STATION 31+05

SR 1138 SILVER CREEK ROAD

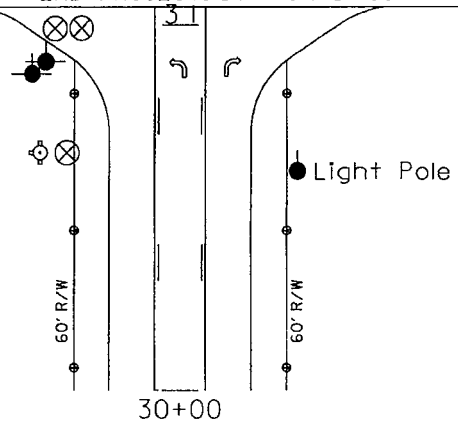

POLK COUNTY
(ID:27131)
PO BOX 308
COLUMBUS, NC 28722

POLK COUNTY
(ID:27131)
PO BOX 308
COLUMBUS, NC 28722

PIPE DATA	Wolverine Trail (Road Addition)		Page 1 of 1
County: Polk	WORK ORDER: 14.207511		
STATION	PRESENT SIZE	PROPOSED SIZE	NOTES
0+15	Double 80' x 60" CMP		4'Live Stream with Headwall On Each End
6+28	100' x 24" CMP		Cross Pipe
7+95	Drop Inlet		Drop Inlet Off R/W
7+95	44' x 24" CMP		Driveway Pipe Off R/W
12+10	115' x 4' 7 ½" Multi-Plate Arch Structure		Cross Pipe With Retaining Wall On Each End-10' Live Stream
15+48	40' x 15" CMP		Driveway Pipe Off R/W
18+19	Drop Inlet		Drop Inlet Off R/W
18+19	18' x 30" HDPE		In Ditch Line Off R/W With Headwall
24+70	Drop Inlet		Drop Inlet Off R/W
24+70	64' x 15" HDPE		Driveway Pipe Partial R/W
25+40	Drop Inlet		Drop Inlet
25+40	73' x 36" CMP		Cross Pipe
26+70	15" HDPE		In Ditch Line Off R/W
26+75	12" HDPE		To Be Removed
26+90	70' x 36" CMP		Cross Pipe With Headwall On Inlet

UTILITY DATA

Project: Wolverine Trail (Road Addition)
County: Polk
Owners: Windstream, Duke Energy, Rutherford Electric, Charter Communication, Town of Columbus

Station	Pole Number	Dist. From Center Present Road		Dist. From Center Project		Dist. Center Project After Moving		Remarks
		Lt.	Rt.	Lt.	Rt.	Lt.	Rt.	
0+90			44		44			Multi-Use Pole
0+95			44		44			Guy Wire
1+00			32		32			Light Pole
2+65		32		32				Light Pole
4+82			32		32			Light Pole
5+98		18		18				Sewer Manhole
6+72			24		24			Sewer Manhole
6+74		30		30				Sewer Manhole
6+77			21		21			In-ground Power Ped
6+79		30		30				In-ground Power Ped
6+82			30		30			Fiber Optic Ped
7+16		31		31				Light Pole
7+69		40						Water Valve
7+69		45		45				Water Pump
8+00			29		29			Telephone Ped
8+25			30		30			Light Pole
9+03			20		20			Sewer Manhole
11+30		28		28				Water Valve
11+30		31		31				Fire Hydrant
11+41			17		17			Sewer Manhole
11+62		29		29				Water Meter
11+70		25		25				Water Valve
11+74		28		28				Water Valve
11+79		37		37				Light Pole
12+06			29		29			Telephone Ped

Station	Pole Number	Dist. From Center Present Road		Dist. From Center Project		Dist. Center Project After Moving		Remarks
		Lt.	Rt.	Lt.	Rt.	Lt.	Rt.	
12+63		23		23				Water Valve
12+77			22		22			Sewer Manhole
13+60			33		33			Light Pole
15+95			33		33			Sewer Manhole
16+03		32		32				Light Pole
16+25			42		42			Telephone Ped
16+25			43		43			Multi-Use Pole
18+22		33		33				Light Pole
19+39			23		23			In-ground Power Ped
19+42			40		40			Telephone Ped
19+80		30		30				Sewer Manhole
19+81			30		30			Sewer Manhole
20+05			31		31			Light Pole
20+58		22		22				Water Valve
20+58		29		29				Fire Hydrant
21+20		20		20				Sewer Manhole
22+52		34		34				Light Pole
24+62			31		31			Light Pole
24+88		19		19				Water Valve
24+91		21		21				Water Valve
24+93		19		19				Water Valve
26+60		40		40				Light Pole
29+50			31		31			Light Pole
30+60			33		33			Light Pole
30+65		32		32				Water Valve
30+65		39		39				Fire Hydrant
30+88		32		32				Multi-Use Pole
30+94		31		31				Multi-Use Pole
30+98		29		29				Water Valve
30+98		34		34				Water Valve

Polk County Vicinity Map: Wolverine Trail (Road Addition)

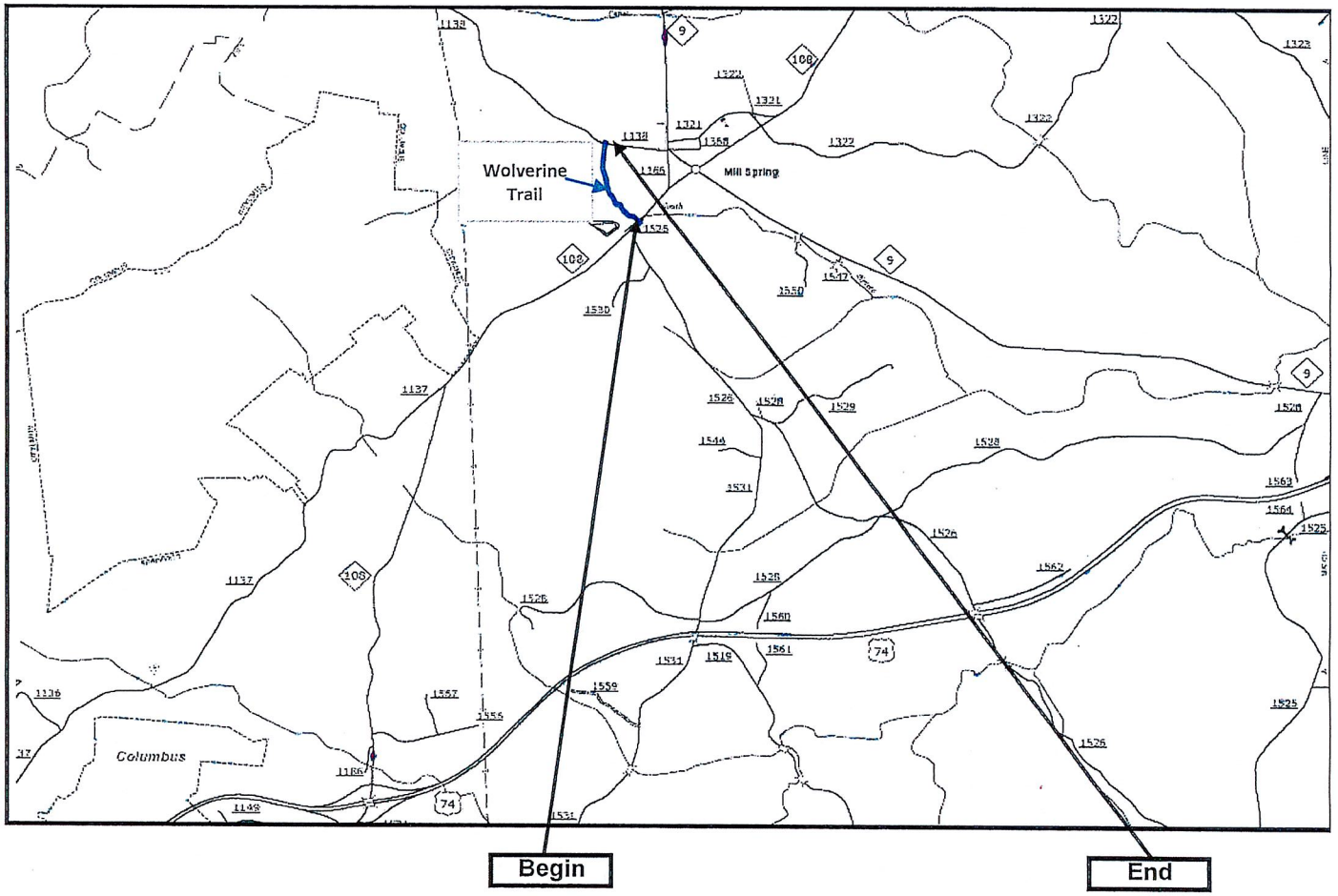

NC Department of Transportation
Preliminary Engineer's Estimate - Wolverine Trail

Date:	05/20/2024
Division #:	14
County:	Polk
Description:	Wolverine Trail

Line #	Item #	Section #	Item Description	FA Item	Quantity	Units	Unit Price	Bid Amount
1	0000100000-N	800	MOBILIZATION		1.00	LS	$9,100.00	$9,100.00
2	2570000000-N	SP	MODIFIED CONCRETE FLUME		1.00	EA	$4,150.00	$4,150.00
3	3030000000-E	862	STL BEAM GUARDRAIL		150.00	LF	$30.00	$4,500.00
4	3210000000-N	862	GR END TYPE CAT-1		2.00	EA	$55.00	$110.00
5	3287000000-N	862	GR END TYPE TL-3		2.00	EA	$1,600.00	$3,200.00
6	4457000000-N	1105	TEMP TRAFFIC CONTROL (SP)		1.00	LS	$4,000.00	$4,000.00
7	4890000000-E	1205	GENERIC PAVEMENT MARKING ITEM HOT SPRAY THERMOPLASTIC PAVEMENT MARKING LINES, 6", 50 MIL		12,150.00	LF	$0.75	$9,112.50
8	4890000000-E	1205	GENERIC PAVEMENT MARKING ITEM HOT SPRAY THERMOPLASTIC PAVEMENT MARKING LINES, 24", 50 MIL		219.00	LF	$40.00	$8,760.00
9	4720000000-E	1205	THERMOPLASTIC PAVEMENT MARKING CHARACTER (90 MILS)		28.00	EA	$275.00	$7,700.00
10	4725000000-E	1205	THERMOPLASTIC PAVEMENT MARKING SYMBOL (90 MILS)		20.00	EA	$375.00	$7,500.00
11	6117500000-N	SP	CONCRETE WASHOUT STRUCTURE		1.00	EA	$4,875.00	$4,875.00
12	6133000000-N	SP	GENERIC EROSION CONTROL ITEM		1.00	LS	$5,000.00	$5,000.00

FA Items:	$	-
Contract Items:	$	68,007.50
Subtotal:	$	68,007.50
Project Development / Plan Preparation:		
Project Administration / Inspection:	$	6,800.00
Total Estimate:	**$**	**74,807.50**
Use	**$**	**75,000.00**

BUDGET AMENDMENT: GENERAL FUND BALANCE

DATE: 9/3/2024 BOC Meeting BATCH #: _____ LINE_____

Dept.: Recreation Complex

Amendment # : 4-F Fund balance

INCREASE EXPENSE			INCREASE FUND BALANCE APPROPRIATED		
GL ACCOUNT #			GL ACCOUNT #		
10-6122-5800-0	Capital Improve	$ 75,000	10-3991-0000	Fund Balance Approp	$ (75,000)
		75,000			(75,000)

EXPLANATION: To appropriate fund balance for the improvements needed to Wolverine Trail (road) in order to turn the road over to NCDOT.

_____

Date approved & entered into the BOC minutes

_____ _____

COUNTY MANAGER **FINANCE OFFICER**

SECONDARY ROAD RIGHT OF WAY AGREEMENT

THIS INSTRUMENT DRAWN BY: Jacob B Day CHECKED BY: _____

RETURN TO: Frankie J Dills, Jr., Division R/W Agent, NCDOT
1594 E Main ST
Sylva NC 28779

NORTH CAROLINA
COUNTY OF POLK
TOWNSHIP OF Mill Spring

PARCEL: 075ADD 001
WBS ELEMENT: 14C.207511
SECONDARY ROAD NO.: ADD
NAME OF ROAD: Wolverine Trail

Polk County
PO Box 308
Columbus NC 28722
the undersigned owners of that certain property described in Deed Book 459 at Page 2422
in the Register of Deeds Office of Polk County, and bounded by _____

recognizing the benefits to said property by reason of the Department of Transportation assuming responsibility for the maintenance of the above-described road, hereby grants to the North Carolina Department of Transportation, the right of way for said proposed road and releases the Department from all claims for damages by reason of said right of way across the lands of the undersigned and the past and future use thereof by the Department, its successors and assigns for all purposes for which the Department is authorized by law to subject said right of way; said right of way being the width indicated and across said property as follows:

60 feet in width measured 30 feet on each side of the centerline of said proposed road, and such additional widths as might be necessary to provide for cut and fill slopes, sedimentation control and drainage of road.

It is understood and agreed that the centerline of the 60 foot right of way hereinabove has been staked out upon the property of the undersigned and that the centerline of the road is located in the center of the right of way stakes. The undersigned property owners further agree not to erect any structures, including masonry mailboxes, masonry driveway headwalls, any fencing, etc., or engage in cultivation within the right of way granted herein, except as approved by the North Carolina Department of Transportation pursuant to G.S. 136-93 and N.C. Administrative Code 19A NCAC 02E.0404.

It is further understood and agreed that additional 20' foot Right of Way is needed for the Left of the Center Line and 20' foot Right of the Center line at Stations 0+00 to 0+50.

Also, it is further understood and agreed that additional 30' foot Right of Way is needed for the Left of the Center Line at Stations 12+00 to 13+50 and 30' foot Right of Way is needed for the Right of the Center Line at Stations 11+50 to 13+00.

There are no conditions to this agreement not expressed herein. The undersigned hereby covenant and warrant that they are the sole owners of said property; that they solely have the right to grant this right of way, and that they will forever warrant and defend the title to the same against the lawful claims of all persons whomsoever.

(For Addition to System Where Right of Way is Staked Out on Ground)

COUNTY: POLK **WBS ELEMENT:** 14C.207511 **PARCEL NO.:** 075ADD 001

IN WITNESS WHEREOF, we have hereunto set our hands and affixed our seals this the _____ day of _____ , 20 _____ .

Polk County

(CORPORATE SEAL) BY: _____
, County Manager
Of Polk County

Polk County

ATTEST: _____
, Clerk of
Polk County

ACCEPTED FOR THE DEPARTMENT OF TRANSPORTATION BY: _____

(Official Seal)	North Carolina, _____ County I, _____ , a Notary Public for _____ County, North Carolina, certify that _____ personally came before me this day and acknowledged that he/she is the CLERK of the Polk COUNTY and that by authority duly given, the foregoing instrument was signed in its name by its County Manager of Polk COUNTY, sealed with its corporate seal, and attested by _____ as its CLERK. Witness my hand and official seal this the _____ day of _____ , 20 _____ . _____ Notary Public My commission expires: _____