City Council
Meeting Minutes
Tuesday, September 15, 2026
6:00 PM

Present: Mayor Joe Gibbons presiding. Councilmembers present were Jonathan Beal, Rebecca Dellinger, Ralph Prestwood, Kimmie Rogers, David Stevens, Crissy Thomas, City Manager Scott Hildebran, City Clerk Lauren Hartley, and Attorney Timothy Rohr.

City Staff: In attendance was Finance Director Donna Bean, Public Services Public Works Director Jon Hogan, Fire Chief Norman Staines, Police Chief Andy Wilson, Planning Director Hannah Williams, City Parks & Recreation Director Phil Harper, Public Services Public Utilities Director Jeff Church, and Economic Development Main Street Director Brenda Floyd.

Absent Mayor Pro-Tem Ike Perkins, Communication & Public Information Director Joshua Harris

I. Call to Order

A. Mayor Gibbons made the following announcements:

- Constitution Week takes place September 17 to September 23, 2026. A proclamation will be presented to the Daughters of the American Revolution (DAR) on Thursday, September 17, 2026, at 10:00 a.m. at the Charters of Freedom in Downtown.
- The 40th Annual Sculpture Celebration was held and had a great turnout.
- A sign dedication for Rick Pierce will be held on Monday, September 21, 2026, at 5:30 p.m. at the Rotary soccer complex.
- The Caldwell County America 250 Committee is receiving an award from the North Carolina Society of Historians for the permanent historical exhibit located at the Caldwell County Office “Our Story: The History of Caldwell County."

The meeting was opened by a moment of silence and the pledge of allegiance led by Mayor Gibbons.

B. Mayor Gibbons presented a proclamation to Emmanual Lazo, Secretary, Concilio Hispano, Inc., proclaiming the month of September 15 to October 15, 2026, as “National Latino and Hispanic Heritage Month” throughout the City of Lenoir.

Emmanual Lazo spoke about the Proclamation for National Latino and Hispanic Heritage Month and what it means to the community.

II. Matters Scheduled for Public Hearings

There were no public hearings.

III. Consent Agenda Items

Consent Agenda Items

A. Minutes: Approval of the City Council minutes of the meeting of Tuesday, September 1, 2026, as submitted.

B. Approval Bid Award-Clock Tower Foundation Project; The Clock TowerFoundation design was let for bid informally on August 11, 2026, with a closing date of August 28, 2026, at 10:00 am. One bid was received. Therefore, the bid was rejected, and the project was re-advertised on August 28, 2026, bid informally with a closing date of September 11, 2026, at 10:00 am. Following the review of bids submitted, staff recommends awarding the Clock Tower Foundation Project to G&M Structures LLC for the lump sum of $91,837.00. G&M Structures LLC is the lowest, responsive, responsible bidder, is appropriately licensed, and is adequately equipped to perform work of this nature, as submitted.

C. Resolution of Acceptance for Environmental Protection Agency (EPA)Brownfields Clean-up Grant; Approval of a resolution to authorize the acceptance of an Environmental Protection Agency (EPA) Brownfields Clean-up Grant in the amount of $500,000.00. The purpose of the grant is to complete the site clean-up of the old Broyhill property located at the corner of Virginia Street and College Avenue. The project includes the hiring of a duly qualified contractor for the removal of the remaining material to an appropriately approved landfill facility under the direction of the City and MidAtlantic Associates, the City's environmental consultant. Staff recommends approval of the resolution, as submitted.

D. Approval of the City of Lenoir and Town of Blowing Rock Sludge Agreement;The City of Lenoir and the Town of Blowing Rock have had an agreement for the Lower Creek Wastewater Treatment facility to accept municipal wastewater treatment plant sludge from the Town for approximately 30 years. This updated agreement modifies the original agreement to meet current permit requirements. Throughout the term of this agreement, Blowing Rock will continue to hold all appropriate permits necessary to effectuate their responsibilities under the agreement, or will use their best effort to obtain such permits. Lenoir will not increase said rates to Blowing Rock more than one time during any fiscal year of twelve (12) months ending on June 30 of each year. Lenoir agrees to notify Blowing Rock in writing of planned increases in rates at least ninety (90) days prior to June 30 of any fiscal year, with rate increases that are to become effective on July 1 of that same year. Staff recommends approval of the agreement, as submitted.

Councilmember Stevens said the agreement is for 9,000 gallons per week. What is the normal amount for them to submit per week?

City Manager Scott Hildebran said in the past 12 months Blowing Rock has not submitted anything and this agreement is well within the limits.

E. Proclamation; National Latino and Hispanic Heritage Month: Approval of proclamation proclaiming September 15, 2026–October 15, 2026, as "National Latino and Hispanic Heritage Month" throughout the City of Lenoir.

Upon a motion by Councilmember Stevens, City Council voted 6 to 0 to adopt the above listed items (A through E) on the Consent Agenda as listed and recommended.

IV. Requests and Petitions of Citizens

- Esmeralda Ixchajchal, Director of Concilio Hispoano Inc. of 1601 N Main Street thanked Mayor Gibbons and the City Council for recognizing Hispanic and Latino Heritage Month and read the Proclamation for the Spanish community.

V. Reports and Boards and Commissions

Rick Oxford, HOME Program Plan Administrator, Western Piedmont Council of Governments will hold a public meeting to receive public input and comments concerning the proposed FY-2025 Consolidated Annual Performance and Evaluation Report. This report details the activities and expenditures of Community Development Block Grant and HOME funds during the period beginning July 1, 2025 through June 30, 2026.

A. Jennifer Cannon, Project Manager Western Piedmont Council of Governments presented the proposed FY-2025 Consolidated Annual Performance and Evaluation Report and said the City of Lenoir receives both Community Development Block Grant (CDBG) Program and HOME Program funding from the U.S. Department of Housing and Urban Development (HUD). One requirement of HUD is that the City must complete a Consolidated Annual Performance and Evaluation Report.

The City of Lenoir received $984,230.65 in HOME Program funds from HUD in FY-2025. The City also received an additional $445,772.68 in generated HOME Program Income. The City serves as the lead entity of 28 local governments, the Unifour HOME Consortium. The City, as Lead Entity of the HOME Consortium, has assisted 34 applicants to become first-time homebuyers.

The City also funded two different Community Housing Development Organizations (CHDOs), which resulted in the construction of four new Habitat homes during this reporting period. The City also funded two Multi-Family Apartment Projects, which created 126 rental apartment units. The City of Lenoir received $136,612 in CDBG funds. The City is in the process of using CDBG funding for public facilities improvements at the Old Lenoir High School Campus Complex, which is located in the low-income census tracts.

Jennifer Cannon said the first-time home buyers program covers four counties and

can provide up to $20,000 to qualified applicants for a purchase of a home. The repayment would be paid back if or when the purchaser sells the home.

Councilmember Stevens said if the home buyer does not sell the home, will the assistance loan be repaid?

Jennifer Cannon said yes, in years 10-100 they will only owe half. If the home buyer sells or the home is passed down to an heir, they will pay it out of the settlement. The repayment then goes back into the program.

No one came forward for public input or comment.

VI. Reports and Recommendations of the City Manager

A. City Manager Scott Hildebran presented the following items of information:

1. The City of Lenoir Litter Sweep day is Thursday, September 17.

2. The ABC Board will meet on Thursday, September 17 at 2:00 p.m.

3. The Parks and Recreation Board will meet on Monday, September 21 at 6:00 p.m. at the Aquatic Fitness Center.

The sign dedication for Rick Pierce will be held on Monday, September 21, 2026, before the meeting at 5:45 p.m. at the Rotary soccer complex.

4. The Parks and Recreation Board will meet on Monday, September 21 at 6:00 p.m. at the Aquatic Fitness Center.

5. The Foothills Regional Airport Authority will meet on Wednesday, September 23 at noon.

6. Friday Night Live concert featuring Wild Canyon Band will be held Friday, September 25, from 7:00 p.m. to 10:00 p.m. at the Downtown Lenoir Stage.

VII. Reports and Recommendations of the City Attorney

There was no report from the City Attorney.

VIII. Reports and Recommendations of the Mayor

There was no report from the Mayor.

IX. Reports and Recommendations of Council Member

There was no report from Councilmembers.

X. Adjournment

There being no further business, Mayor Gibbons adjourned the meeting at 6:28 p.m.

_____ _____

Lauren Hartley, City Clerk Joseph L. Gibbons, Mayor

CITY MANAGER
SCOTT E. HILDEBRAN

CITY OF LENOIR
NORTH CAROLINA

MAYOR
JOSEPH L. GIBBONS

CITY COUNCIL
J. T. BEAL
R.C. DELLINGER
J. I. PERKINS
R. S. PRESTWOOD
K. R. ROGERS
D. F. STEVENS
C. D. THOMAS

PROCLAMATION FOR HISPANIC AND LATINO HERITAGE MONTH BETWEEN CONCILIO HISPANO INC. AND THE CITY OF LENOIR 2026

WHEREAS, the United States of America observes National Latino and Hispanic Heritage Month ("Mes de la Herencia Latina y Hispana") from September 15 to October 15 each year since its inception in 1968; and

WHEREAS, we appreciate the annual opportunity to celebrate the history, culture, and contributions of those residing in the United States whose roots stem from Latin America, the Caribbean, Spain, or Hispanic origins; and

WHEREAS, we are encouraged by the growth of *la Comunidad Latina* ("Latino's Community") in our City and the contributions from la Comunidad Latina in enriching our City; and

WHEREAS, we fully believe that the growth of la Comunidad Latina makes the City of Lenoir a more culturally diverse and welcoming area for anyone who chooses to make the City of Lenoir their home for themselves and their future generations; and

WHEREAS, we are guided *by* the City's motto, "Create With Us", and Concilio's mission in creating a more welcoming hometown, both working in harmony towards a common mission of ensuring that all persons who choose to make Lenoir their home are invited to do so; and

WHEREAS, we reiterate our shared call for community, unity, and protection, confident in our mission and vision for our City and everyone residing within it.

NOW, THEREFORE, I, Joseph L. Gibbons, Mayor of the City of Lenoir and the City Council, do hereby proclaim September 15, 2026 to October 15, 2026 to be **Latino and Hispanic Heritage Month** and calls on all congregations, organizations, businesses, and people within Lenoir and Caldwell County to join us and the community in observing Latino and Hispanic Heritage Month.

IN WITNESS WHEREOF, I have hereunto set my hand and caused the Seal of the City of Lenoir, North Carolina to be affixed this 15th day of September, 2026.

SEAL

Joseph L. Gibbons, Mayor

ATTEST:

Lauren Hartley, City Clerk

Docusign Envelope ID: 49C0A7C7-4856-803D-81DE-6A99A96B70D4

Randy W. Beckner
Bradley C. Craig
Wm. Thomas Austin
James B. Voso
Chad M. Thomas
Jason A. Carder
Brian R. Newman
D. Jason Snapp
Ryan P. Kincer

Mattern & Craig
ENGINEERS • SURVEYORS

Edwin K. Mattern, Jr. (1949-1982)
J. Wayne Craig (1940-2024)
Gene R. Cress (1935-2014)
Sam H. McGhee, III (1940-2018)
Stewart W. Hubbell (Retired)
J. Wayne Craig (Retired)
Michael S. Agee (Retired)
Steven A. Campbell (Retired)
Randy L. Dodson (Retired)

September 11, 2026

Scott Hildebran, City Manager
City of Lenoir
801 West Avenue NW
2nd Floor
Lenoir, NC 28645
shildebran@ci.lenoir.nc.us

Re: Clock Tower Recommendation of Award

Mr. Hildebran:

Informal rebids for the Clock Tower project, were received by the City on September 11, 2026 at 10:00 am. Two bids were received from a total of eight plan holders as noted upon the attached Certified Bid Tabulation.

After final review and verification of the required documents in the bid package provided by the Contractors, the only compliant, bidder was G&M Structures LLC. on this project.

The Certified Bid Tab is included as an enclosure to this letter and hard copies of the Bid Packages were submitted to the City directly and can be forwarded to the City Clerk for your records. The Bid Forms and other required Bid Documents submitted by G&M Structures LLC. on the project have been reviewed by Mattern & Craig and are in conformance with the requested Bid Document requirements.

M&C has provided as enclosures to this letter including the verification of the Contractor's Licensure, Classification, and other attached documents.

M&C evaluated the total Project Bid Price submitted by the Contractor and although this bid is 14% higher the engineer's estimate for the project amount, M&C hereby recommends that the City issue a contract award for the project to G&M Structures LLC, for a total Contract Value of $91,837.00.

Docusign Envelope ID: 49C0A7C7-4856-803D-81DE-6A99A96B70D4

Thank you for allowing Mattern & Craig to assist you with this work. Please feel free to contact me at (828) 855-2233 or brnewman@matternandcraig.com to discuss the Project in greater detail.

Sincerely,
MATTERN & CRAIG

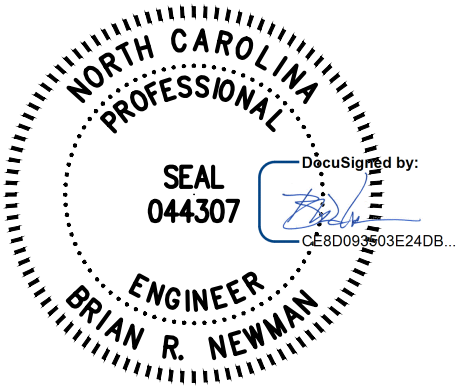

Brian Newman, PE
Principal

Attachments: Engineer's Certified Bid Tabulation
Contractor's Licensure Verification
Evidence of Authority to do Business

Cc: Lauren Hartley, City Clerk – City of Lenoir
Jon Hogan, Director of Public Works – City of Lenoir

Docusign Envelope ID: 49C0A7C7-4856-803D-81DE-6A99A96B70D4

BID SUMMARY for Clock Tower
City of Lenoir
Bid Date: September 11, 2026
Bid Time: 10:00AM

PLANHOLDERS	Bid Security	Subs List	Suppliers List	Business Authority	Contractor's License #	TOTAL BID PRICE	Compliant Bid
ENGINEER'S ESTIMATE	X	X	X	X	X	X	N/A
G&M Structures LLC	X	N/A	N/A	X	107789	$ 91,837.00	Yes
High Country Concrete Services LLC	No	No	No	No	No	$ 49,500.00	No
Wilkie Construction							No Bid
Unique Concrete Services Group LLC							No Bid
Mountain Crest LLC							No Bid
Concrete Bros LLC							No Bid
Brushy Mountain Inc.							No Bid
C&S Concrete Company LLC							No Bid
Apparent Low Bidder: G&M Structures LLC							

I certify that this tabulation is a correct and true representation of the bids received at the above date and time.

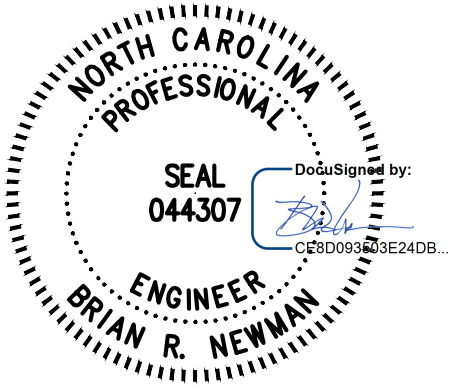

Docusign Envelope ID: 49C0A7C7-4856-803D-81DE-6A99A96B70D4

Clock Tower - City of Lenoir
Comm No. 4322E
BID DATE : September 11, 2026
BID TIME: 10:00 AM

	Charter Hills Rd			G&M Structures LLC		High Country Concrete Services LLC	
Item No.	Description	Unit	Estimated Quantity	Bid Unit Price	Bid Amount	Bid Unit Price	Bid Amount
1	Mobilization (5%)	LS	1	$ 4,600.00	$ 4,600.00	$ -	$ -
2	Foundation and Sidewalk	LS	1	$ 82,287.00	$ 82,287.00	$ -	$ -
3	Traffic Control	LS	1	$ 4,950.00	$ 4,950.00	$ -	$ -
			Total of All Lump Sum Bid Items		$ 91,837.00		$ 49,500.00
			Total of All Lump Sum Bid Items		$ 91,837.00		$ 49,500.00

Apparent Low Bidder: ***G&M Structures LLC***

Terms of the Contract Bid Evaluation:

The award of the contract will be made to the lowest responsible bidder as soon as practical. The owner may award on the basis of the Total of All Unit Price Bids for the Total Bid Price.

I certify that this tabulation is a correct and true representation of the bids received at the above date and time.
Brian Newman, PE Mattern & Craig Engineers - Surveyors September 11,2026

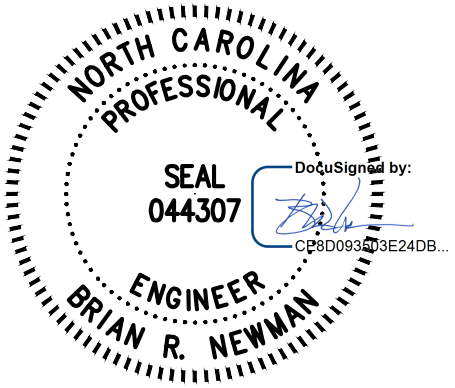

ADVERTISEMENT FOR BIDS

City of Lenoir (Owner) is requesting Bids for the construction of the following Project:

Clock Tower Foundation

Sealed proposals will be received by Jon Hogan until **10:00 am** on **Friday, August 28, 2026**, at **Lenoir Public Works, 501-B Greer Cir SW, Lenoir NC 28645** for construction of Foundation for the Clock Tower and sidewalks at which time and place bids will be opened and read.

The Project includes the following Work: **Removal of existing concrete, Installation of precast or cast in place concrete foundation structures, clearing and grubbing of area which includes minor grading, relocation of 2 pull boxes, additionally form and pour new concrete for sidewalks.**

Bidding Documents may be downloaded from the designated project web link. Prospective Bidders are urged to email the Engineer to register as a plan holder, even if Bidding Documents are obtained from a plan room or source other than the designated link in either electronic or paper format. The designated website will be updated periodically with addenda, lists of registered plan holders, reports, and other information relevant to submitting a Bid for the Project. All official notifications, addenda, and other Bidding Documents will be offered only through the designated link. Neither Owner nor Engineer will be responsible for Bidding Documents, including addenda, if any, obtained from sources other than the designated website.

The Engineer & Issuing Office for the Bidding Documents is: **Brian Newman, PE - Mattern & Craig** **brnewman@matternandcraig.com ; 231 16th Avenue NE, Hickory, NC 28601**

Full hard copy or partial sets of Bidding Documents will not be available from the Issuing Office. Neither Owner nor Engineer will be responsible for full or partial sets of Bidding Documents, including addenda, if any, obtained from sources other than the electronic (digital) documents available via web link from the Issuing Office. Bidders must be a licensed in the State of North Carolina.

Instructions to Bidders: For all further requirements regarding bid submittal, qualifications, procedures, and contract award, refer to the Instructions to Bidders that are included in the Bidding Documents.

City of Lenoir reserves the unqualified right to reject any and all proposals.

This Advertisement is issued by: **City of Lenoir: Jon Hogan – Public Works Director**

Copyright© 2018 National Society of Professional Engineers, American Council of Engineering Companies, and American Society of Civil Engineers. All rights reserved.

AGREEMENT BETWEEN OWNER AND CONTRACTOR FOR CONSTRUCTION CONTRACT (STIPULATED PRICE)

This Contract is by and between City of Lenoir, a North Carolina municipal corporation, (Owner) and _____, a North Carolina corporation, (Contractor) and is effective as of this the: ___day of _____ 2026 (the Effective Date).

Terms used in this Agreement have the meanings stated in the General Conditions and the Supplementary Conditions. Owner and Contractor hereby agree as follows:

ARTICLE 1—WORK

1.01 Work includes all labor, materials, equipment, services, and documentation necessary to construct the Project defined herein, all as required by the Contract Documents.

Contractor shall complete all Work as specified or indicated in the Contract Documents. The Work is generally described as follows:

1. Removal of existing concrete, Installation of precast or cast in place concrete foundation structures, clearing and grubbing of area which includes minor grading, relocation of 2 pull boxes, additionally form and pour new concrete for sidewalks.
2. Site of the Work includes property, easements, and designated work areas described in greater detail in the Contract Documents but generally located in within limits shown in exhibits.

ARTICLE 2—THE PROJECT

2.01 The Project, of which the Work under the Contract Documents is a part, is generally described as follows:

1. **Clock Tower –** which includes, but is not limited to, Removal of existing concrete, Installation of precast or cast in place concrete foundation structures, clearing and grubbing of area which includes minor grading, relocation of 2 pull boxes, additionally form and pour new concrete for sidewalks.

2.02 The Owner has retained **Mattern & Craig** ("Engineer") to act as Owner's representative, assume all duties and responsibilities of Engineer, and have the rights and authority assigned to Engineer in the Contract.

2.03 The part of the Project that pertains to the civil engineering Work has been designed by **Mattern & Craig (M&C)**.

ARTICLE 3—CONTRACT TIMES

3.01 *Time is of the Essence*

A. All time limits for Milestones, if any, Substantial Completion, and completion and readiness for final payment as stated in the Contract Documents are of the essence of the Contract.

Copyright© 2018 National Society of Professional Engineers, American Council of Engineering Companies, and American Society of Civil Engineers. All rights reserved.

3.02 *Contract Times: Days*

A. The Work will be substantially complete within **60 days** after the date when the Contract Times commence to run as provided in Paragraph 4.01 of the General Conditions, and completed and ready for final payment in accordance with Paragraph 15.06 of the General Conditions within **75 days** after the date when the Contract Times commence to run.

3.03 *Liquidated Damages*

A. Contractor and Owner recognize that time is of the essence as stated in Paragraph 4.01 above and that Owner will suffer financial and other losses if the Work is not completed and Milestones not achieved within the Contract Times, as duly modified. The parties also recognize the delays, expense, and difficulties involved in proving, in a legal or arbitration proceeding, the actual loss suffered by Owner if the Work is not completed on time. Accordingly, instead of requiring any such proof, Owner and Contractor agree that as liquidated damages for delay (but not as a penalty):

1. *Substantial Completion:* Contractor shall pay Owner **$250 for each day** that expires after the time (as duly adjusted pursuant to the Contract) specified above for Substantial Completion, until the Work is substantially complete.

B. If Owner recovers liquidated damages for a delay in completion by Contractor, then such liquidated damages are Owner's sole and exclusive remedy for such delay, and Owner is precluded from recovering any other damages, whether actual, direct, excess, or consequential, for such delay, except for special damages (if any) specified in this Agreement.

ARTICLE 4—CONTRACT PRICE

4.01 **OWNER SHALL PAY CONTRACTOR FOR COMPLETION OF THE WORK IN ACCORDANCE WITH THE CONTRACT DOCUMENTS, THE AMOUNTS THAT FOLLOW, SUBJECT TO ADJUSTMENT UNDER THE CONTRACT:**

A. For the following lump sum (stipulated) price(s)

Item No.	Description	Contract Amount
1	Mobilization @5%	$
2	Foundation and Sidewalks	$
3	Traffic Control	$
	Subtotal of this Lump Sum Amount	

B. For all Work other than Unit Price Work, a **Total Lump Sum Contract Amount** of **$[number]**.

All specific cash allowances are included in the above price in accordance with Paragraph 13.02 of the General Conditions.

Copyright© 2018 National Society of Professional Engineers, American Council of Engineering Companies, and American Society of Civil Engineers. All rights reserved.

C. For all Unit Price Work, an amount equal to the sum of the extended prices (established for each separately identified item of Unit Price Work by multiplying the unit price times the actual quantity of that item).

D. The extended prices for Unit Price Work set forth as of the Effective Date of the Contract are based on estimated quantities. As provided in Paragraph 13.03 of the General Conditions, estimated quantities are not guaranteed, and determinations of actual quantities and classifications are to be made by Engineer.

E. Total of Lump Sum Amount and Unit Price Work (subject to final Unit Price adjustment) **$[number]**.

F. For all Work, at the prices stated in Contractor's Bid, attached hereto as an exhibit.

ARTICLE 5—PAYMENT PROCEDURES

5.01 *Submittal and Processing of Payments*

A. Contractor shall submit Applications for Payment in accordance with Article 15 of the General Conditions. Applications for Payment will be processed by Engineer as provided in the General Conditions.

5.02 *Progress Payments; Retainage*

A. Owner shall make progress payments on the basis of Contractor's Applications for Payment on or about the **10th day of each month** during performance of the Work as provided in Paragraph 6.02.A.1 below, provided that such Applications for Payment have been submitted in a timely manner and otherwise meet the requirements of the Contract. All such payments will be measured by the Schedule of Values established as provided in the General Conditions (and in the case of Unit Price Work based on the number of units completed) or, in the event there is no Schedule of Values, as provided elsewhere in the Contract.

1. Prior to Substantial Completion, progress payments will be made in an amount equal to the percentage indicated below but, in each case, less the aggregate of payments previously made and less such amounts as Owner may withhold, including but not limited to liquidated damages, in accordance with the Contract.

a. **90 percent of the value of the Work completed** (with the balance being retainage).

1) If 50 percent or more of the Work has been completed, as determined by Engineer, and if the character and progress of the Work have been satisfactory to Owner and Engineer, then as long as the character and progress of the Work remain satisfactory to Owner and Engineer, there will be no additional retainage; and

b. **90 percent of cost of materials and equipment** not incorporated in the Work (with the balance being retainage).

B. Upon Substantial Completion, Owner shall pay an amount sufficient to increase total payments to Contractor to **[number]** percent of the Work completed, less such amounts set off by Owner pursuant to Paragraph 15.01.E of the General Conditions, and less **[number]** percent of Engineer's estimate of the value of Work to be completed or corrected as shown on the punch list of items to be completed or corrected prior to final payment.

Copyright© 2018 National Society of Professional Engineers, American Council of Engineering Companies, and American Society of Civil Engineers. All rights reserved.

5.03 *Final Payment*

A. Upon final completion and acceptance of the Work, Owner shall pay the remainder of the Contract Price in accordance with Paragraph 15.06 of the General Conditions.

5.04 *Consent of Surety*

A. Owner will not make final payment, or return or release retainage at Substantial Completion or any other time, unless Contractor submits written consent of the surety to such payment, return, or release.

5.05 *Interest*

A. All amounts not paid when due will bear interest at the rate of **[number]** percent per annum.

ARTICLE 6—CONTRACT DOCUMENTS

6.01 *Contents*

A. The Contract Documents consist of all of the following:

1. This Agreement.
2. Bonds:
    a. Performance bond (together with power of attorney).
    b. Payment bond (together with power of attorney).
3. General Conditions.
4. Supplementary Conditions.
5. Specifications as listed in the table of contents of the project manual (copy of list attached).
6. Drawings (not attached but incorporated by reference) consisting of **6** sheets with each sheet bearing the following general title: **Foundation and Grade**
7. Addenda (numbers **[number]** to **[number]**, inclusive).
8. Exhibits to this Agreement (enumerated as follows):
    a. **Foundation plan**
    b. **Demolition limits**
9. The following which may be delivered or issued on or after the Effective Date of the Contract and are not attached hereto:
    a. Notice to Proceed.
    b. Work Change Directives.
    c. Change Orders.
    d. Field Orders.
    e. Warranty Bond, if any.

B. The Contract Documents listed in Paragraph 6.01.A are attached to this Agreement (except as expressly noted otherwise above).

Copyright© 2018 National Society of Professional Engineers, American Council of Engineering Companies, and American Society of Civil Engineers. All rights reserved.

C. There are no Contract Documents other than those listed above in this Article 6.

D. The Contract Documents may only be amended, modified, or supplemented as provided in the Contract.

ARTICLE 7—REPRESENTATIONS, CERTIFICATIONS, AND STIPULATIONS

7.01 *Contractor's Representations*

A. In order to induce Owner to enter into this Contract, Contractor makes the following representations:

1. Contractor has examined and carefully studied the Contract Documents, including Addenda.

2. Contractor has visited the Site, conducted a thorough visual examination of the Site and adjacent areas, and become familiar with the general, local, and Site conditions that may affect cost, progress, and performance of the Work.

3. Contractor is familiar with all Laws and Regulations that may affect cost, progress, and performance of the Work.

4. Contractor has carefully studied the reports of explorations and tests of subsurface conditions at or adjacent to the Site and the drawings of physical conditions relating to existing surface or subsurface structures at the Site that have been identified in the Supplementary Conditions, with respect to the Technical Data in such reports and drawings.

5. Contractor has carefully studied the reports and drawings relating to Hazardous Environmental Conditions, if any, at or adjacent to the Site that have been identified in the Supplementary Conditions, with respect to Technical Data in such reports and drawings.

6. Contractor has considered the information known to Contractor itself; information commonly known to contractors doing business in the locality of the Site; information and observations obtained from visits to the Site; the Contract Documents; and the Technical Data identified in the Supplementary Conditions or by definition, with respect to the effect of such information, observations, and Technical Data on (a) the cost, progress, and performance of the Work; (b) the means, methods, techniques, sequences, and procedures of construction to be employed by Contractor; and (c) Contractor's safety precautions and programs.

7. Based on the information and observations referred to in the preceding paragraph, Contractor agrees that no further examinations, investigations, explorations, tests, studies, or data are necessary for the performance of the Work at the Contract Price, within the Contract Times, and in accordance with the other terms and conditions of the Contract.

8. Contractor is aware of the general nature of work to be performed by Owner and others at the Site that relates to the Work as indicated in the Contract Documents.

9. Contractor has given Engineer written notice of all conflicts, errors, ambiguities, or discrepancies that Contractor has discovered in the Contract Documents, and of discrepancies between Site conditions and the Contract Documents, and the written resolution thereof by Engineer is acceptable to Contractor.

Copyright© 2018 National Society of Professional Engineers, American Council of Engineering Companies, and American Society of Civil Engineers. All rights reserved.

10. The Contract Documents are generally sufficient to indicate and convey understanding of all terms and conditions for performance and furnishing of the Work.

11. Contractor's entry into this Contract constitutes an incontrovertible representation by Contractor that without exception all prices in the Agreement are premised upon performing and furnishing the Work required by the Contract Documents.

7.02 *Contractor's Certifications*

A. Contractor certifies that it has not engaged in corrupt, fraudulent, collusive, or coercive practices in competing for or in executing the Contract. For the purposes of this Paragraph 7.02:

1. "corrupt practice" means the offering, giving, receiving, or soliciting of anything of value likely to influence the action of a public official in the bidding process or in the Contract execution;

2. "fraudulent practice" means an intentional misrepresentation of facts made (a) to influence the bidding process or the execution of the Contract to the detriment of Owner, (b) to establish Bid or Contract prices at artificial non-competitive levels, or (c) to deprive Owner of the benefits of free and open competition;

3. "collusive practice" means a scheme or arrangement between two or more Bidders, with or without the knowledge of Owner, a purpose of which is to establish Bid prices at artificial, non-competitive levels; and

4. "coercive practice" means harming or threatening to harm, directly or indirectly, persons or their property to influence their participation in the bidding process or affect the execution of the Contract.

7.03 *Standard General Conditions*

A. Owner stipulates that if the General Conditions that are made a part of this Contract are EJCDC® C-700, Standard General Conditions for the Construction Contract (2018), published by the Engineers Joint Contract Documents Committee, and if Owner is the party that has furnished said General Conditions, then Owner has plainly shown all modifications to the standard wording of such published document to the Contractor, through a process such as highlighting or "track changes" (redline/strikeout), or in the Supplementary Conditions.

Copyright© 2018 National Society of Professional Engineers, American Council of Engineering Companies, and American Society of Civil Engineers. All rights reserved.

IN WITNESS WHEREOF, Owner and Contractor have signed this Agreement.

This Agreement will be effective on **[indicate date on which Contract becomes effective]** (which is the Effective Date of the Contract).

Owner: City of Lenoir

(typed or printed name of organization)

By: _____
(individual's signature)

Date: _____
(date signed)

Name: Scott Hildebran
(typed or printed)

Title: _____
(typed or printed)

Attest: _____
(individual's signature)

Title: Jon Hogan
(typed or printed)

Address for giving notices:

Designated Representative:

Name: _____
(typed or printed)

Title: _____
(typed or printed)

Address:

Phone: _____

Email: _____

*(If **[Type of Entity]** is a corporation, attach evidence of authority to sign. If **[Type of Entity]** is a public body, attach evidence of authority to sign and resolution or other documents authorizing execution of this Agreement.)*

Contractor:

(typed or printed name of organization)

By: _____
(individual's signature)

Date: _____
(date signed)

Name: _____
(typed or printed)

Title: _____
(typed or printed)

*(If **[Type of Entity]** is a corporation, a partnership, or a joint venture, attach evidence of authority to sign.)*

Attest: _____
(individual's signature)

Title: _____
(typed or printed)

Address for giving notices:

Designated Representative:

Name: _____
(typed or printed)

Title: _____
(typed or printed)

Address:

Phone: _____

Email: _____

License No.: _____
(where applicable)

State: _____

Copyright© 2018 National Society of Professional Engineers, American Council of Engineering Companies, and American Society of Civil Engineers. All rights reserved.

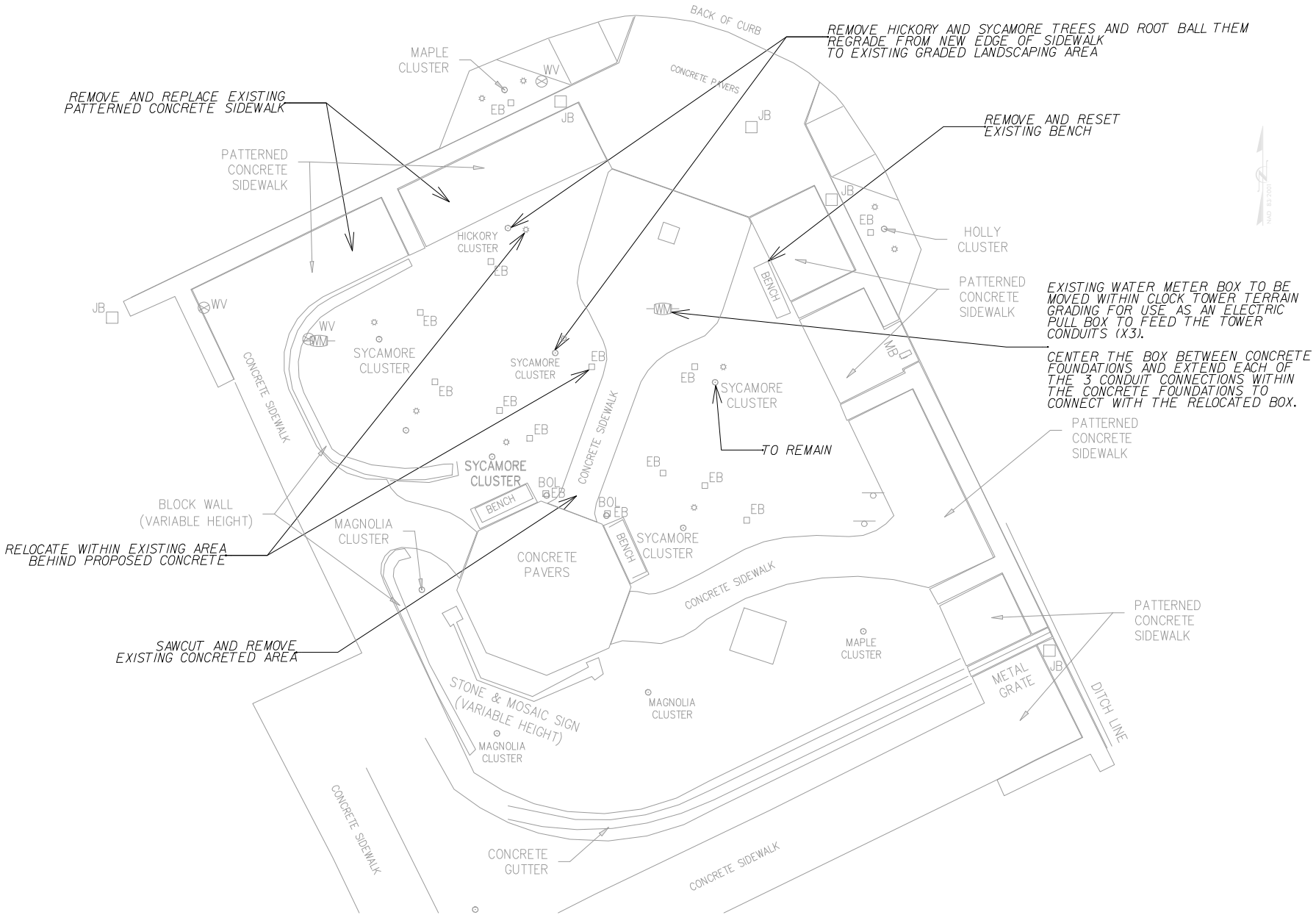

CITY OF LENOIR - CLOCK TOWER

EXISITING CONDITIONS DEMO AND SITE PREP PLAN

CITY OF LENOIR, NORTH CAROLINA

Revisions

Issue Dates: 07/20/2026

Drawn By: EKW

Designed By: EKW

Checked By: BRN

Date: 07/20/26

Mattern & Craig
ENGINEERS - SURVEYORS
231 19th AVENUE NE
HICKORY, NORTH CAROLINA 28601
(828) 855-7133
FAX (828) 855-7133

Vertical Scale: N/A

Horizontal Scale: 1" = 5'

Commission Number: 4322E

Sheet No.:

C-01

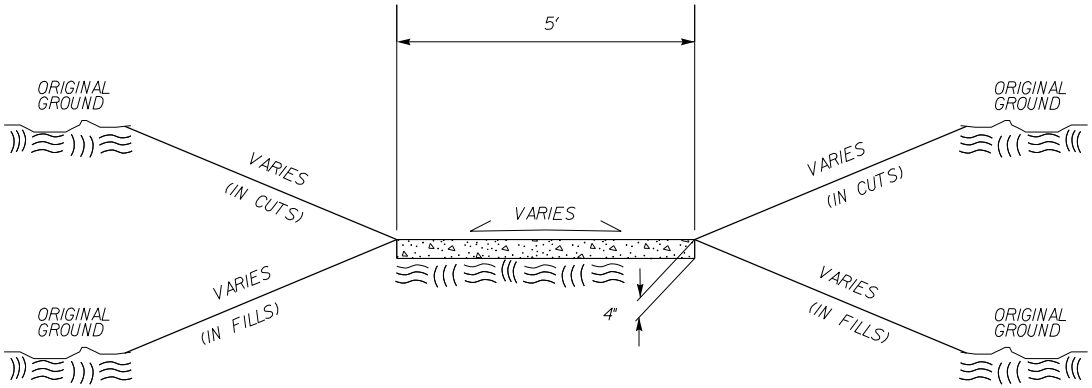

TYPICAL SECTION NO.1

NEW AND EXISTING SIDEWALK INSTALLATION

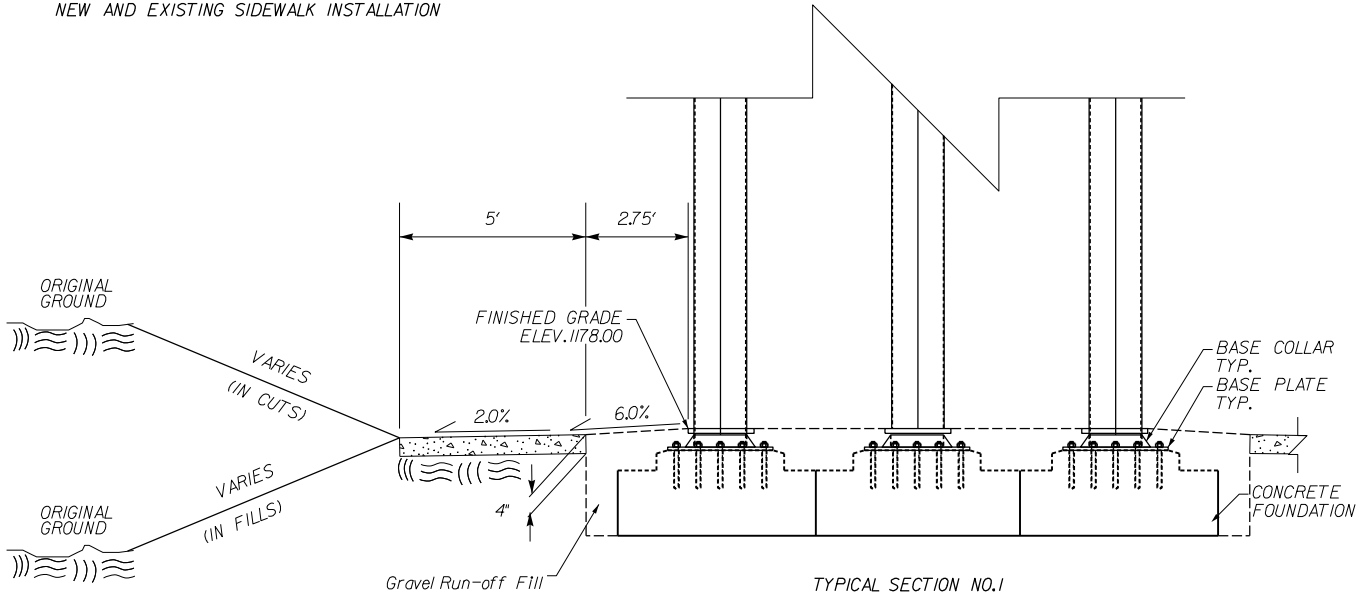

TYPICAL SECTION NO.1

CLOCK TOWER RUST RUN-OFF GRAVEL TRAP AND NEW SIDEWALK

Revisions

Date

Issue Date: 06/29/2026

Drawn By: EKW

Designed By: EKW

Checked By: BRN

Date: 06/29/26

Mattern & Craig
ENGINEERS - SURVEYORS
231 16th AVENUE NE
HICKORY, NORTH CAROLINA 28601
(828) 855-1133
FAX (828) 855-1133

CITY OF LENOIR - CLOCK TOWER

TYPICAL SECTIONS

CITY OF LENOIR, NORTH CAROLINA

Vertical Scale: AS NOTED

Horizontal Scale: AS NOTED

Commission Number: 4322E

Sheet No.: C-02

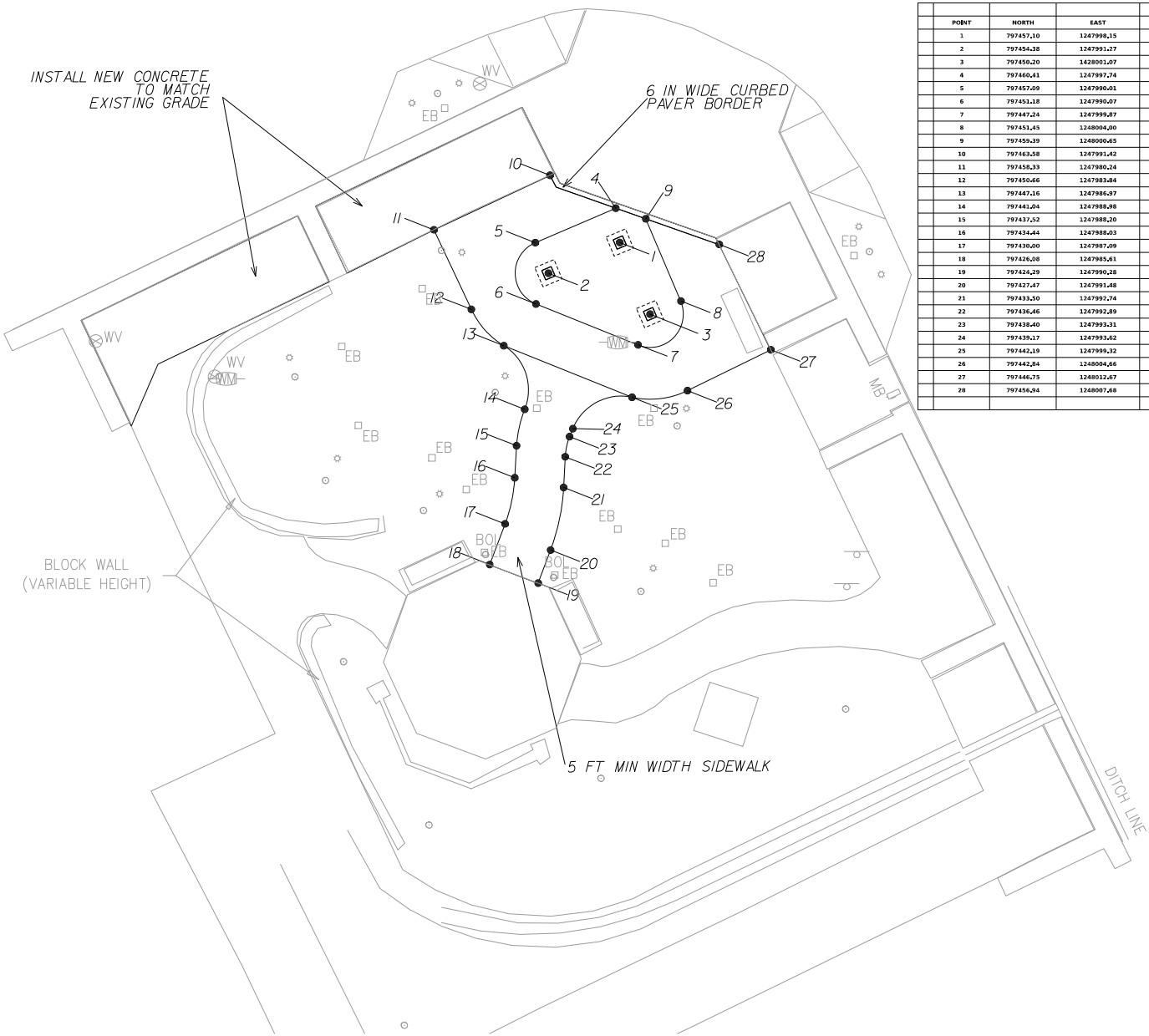

POINT	NORTH	EAST	ELEVATION	DESCRIPTION	RADIUS (FT)
1	797457.10	1247998.15	1178.00	Column 1 of 3	
2	797454.38	1247991.27	1178.00	Column 2 of 3	
3	797450.20	1428001.07	1178.00	Column 3 of 3	
4	797460.41	1247997.74	1177.64	Begin Median	
5	797457.09	1247990.01	1177.39	PC	3.2
6	797451.18	1247990.07	1177.25	PT	
7	797447.24	1247999.87	1177.11	PC	3.2
8	797451.45	1248004.00	1177.15	PT	
9	797459.39	1248000.65	1177.62	END MEDIAN	
10	797463.58	1247991.42	1177.61	BEGIN EDGE OF SIDEWALK_LT	
11	797458.33	1247980.24	1177.20		
12	797450.66	1247983.84	1177.18	PC	8.2
13	797447.16	1247986.97	1177.15	PCC	5
14	797441.04	1247988.98	1176.93	PCC	11
15	797437.52	1247988.20	1176.84	PT	
16	797434.44	1247988.03	1176.75	PC	15
17	797430.00	1247987.09	1176.62	PT	
18	797426.08	1247985.61	1176.68	END EDGE OF SIDEWALK_LT	
19	797424.29	1247990.28	1176.69	BEGIN EDGE OF SIDEWALK_RT	
20	797427.47	1247991.48	1176.62	PC	20
21	797433.50	1247992.74	1176.75	PT	
22	797436.46	1247992.89	1176.81	PC	6
23	797438.40	1247993.31	1176.84	PT	
24	797439.17	1247993.62	1176.86	PC	5
25	797442.19	1247999.32	1177.00	PCC	8.2
26	797442.84	1248004.66	1176.97	PT	
27	797446.75	1248012.67	1176.92		
28	797456.94	1248007.68	1177.40	END EDGE OF SIDEWALK_RT	

NOTE:

CONCRETE PAD AND SIDEWALK CROSS SLOPE SHALL NOT EXCEED 2.00% PER ADA.

Revisions

Date

Issue Dates: 07/20/2026

Drawn By: EKW

Designed By: EKW

Checked By: BRN

Date: 07/20/26

Mattern & Craig
ENGINEERS - SURVEYORS
231 19th AVENUE NE
HICKORY, NORTH CAROLINA 28601
(828) 855-2133
FAX (828) 855-1133

CITY OF LENOIR - CLOCK TOWER

LAYOUT AND GRADE PLAN

CITY OF LENOIR, NORTH CAROLINA

Vertical Scale: AS NOTED

Horizontal Scale: AS NOTED

Commission Number: 4322E

Sheet No.:

C-03

Docusign Envelope ID: 8785CF57-C343-58ED-61DD-3F697CA33B90

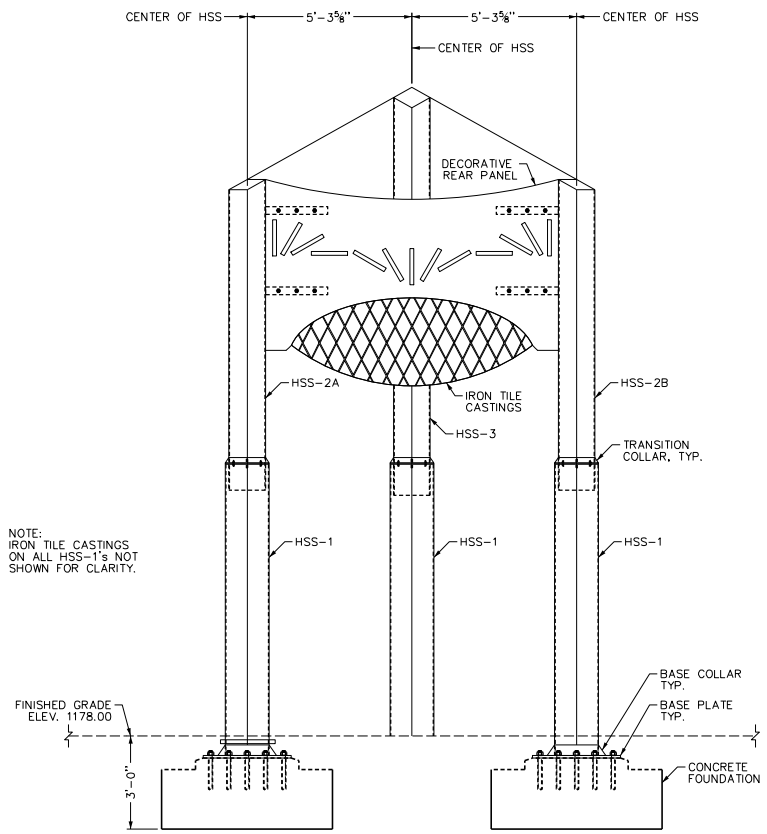

REAR ELEVATION VIEW

GENERAL NOTES

ALL MATERIALS AND CONSTRUCTION SHALL BE IN ACCORDANCE WITH THE NCDOT STANDARD SPECIFICATIONS FOR ROADS AND STRUCTURES, DATED JANUARY 2024.

ALL STRUCTURAL STEEL BARS AND PLATES SHALL BE CORTEN ASTM A588 WITH A MINIMUM YIELD STRENGTH OF 50 KSI.

ALL STRUCTURAL STEEL TUBES SHALL BE CORTEN ASTM A847 WITH A MINIMUM YIELD STRENGTH OF 50 KSI.

CONTRACTOR SHALL SATISFY ANY ADDITIONAL OSHA AND STATE SAFETY REQUIRMENTS.

ALL ELEVATIONS SHOWN IN FEET UNLESS NOTED OTHERWISE.

CONTRACTOR SHALL LOCATE ALL UTILITIES AND UTILITY ELEVATIONS PRIOR TO CONSTRUCTION. ALL UTILITIES TO REMAIN SHALL BE PROTECTED BY THE CONTRACTOR. ANY UTILITIES DAMAGED DURING CONSTRUCTION SHALL BE REPAIRED BY THE CONTRACTOR.

ALL CONCRETE SHALL BE CLASS A (f'c = 3,000 PSI).

All REINFORCING STEEL SHALL BE GRADE 60.

REINFORCING STEEL MAY BE SHIFTED SLIGHTLY AS NECESSARY TO CLEAR ANCHOR BOLTS.

ALL WELDING SHALL BE IN ACCORDANCE WITH CURRENT AWS SPECIFICATIONS PERFORMED BY A CERTIFIED WELDER.

E70XX ELECTRODES SHALL BE USED FOR ALL WELDING.

ANCHOR BOLTS SHALL BE HEADED 1" DIA. ASTM F1554 GR 36. ANCHOR BOLTS SHALL BE EMBEDDED A MINIMUM OF 12" INTO THE CONCRETE.

ALL FIELD CONNECTIONS TO BE 1" DIA. ASTM F3125 GRADE A325 BOLTS WITH CORRESPONDING NUTS AND WASHERS.

THERE SHALL BE CONDUITS CENTERED IN EACH TOWER LEG PEDESTAL. SEE SHEET S-3 FOR MORE DETAILS.

INDEX OF SHEETS

SHEET NO.	DESCRIPTION
S-1	REAR ELEVATION, GENERAL NOTES, AND INDEX OF SHEETS
S-2	STRUCTURE SIDE ELEVATIONS
S-3	FOUNDATION DETAILS

NORTH CAROLINA PROFESSIONAL ENGINEER SEAL 34955 TIMOTHY J. TOMASINO
8/5/2026

Date
Revisions

Issue Date: 07/29/2026
Drawn By: EKW
Designed By: TJT
Checked By: TJT
Date: 07/29/26

Mattern & Craig
ENGINEERS - SURVEYORS
231 19th AVENUE NE
HICKORY, NORTH CAROLINA 28601
(828) 855-1133
FAX (828) 855-1133

CITY OF LENOIR - CLOCK TOWER

REAR ELEVATION, GENERAL NOTES AND INDEX OF SHEETS

CITY OF LENOIR, NORTH CAROLINA

Vertical Scale: 1/2" = 1'-0"
Horizontal Scale: 1/2" = 1'-0"
Commission Number: 4322E
Sheet No.: S-1

Docusign Envelope ID: 8785CF57-C343-58ED-61DD-3F697CA33B90

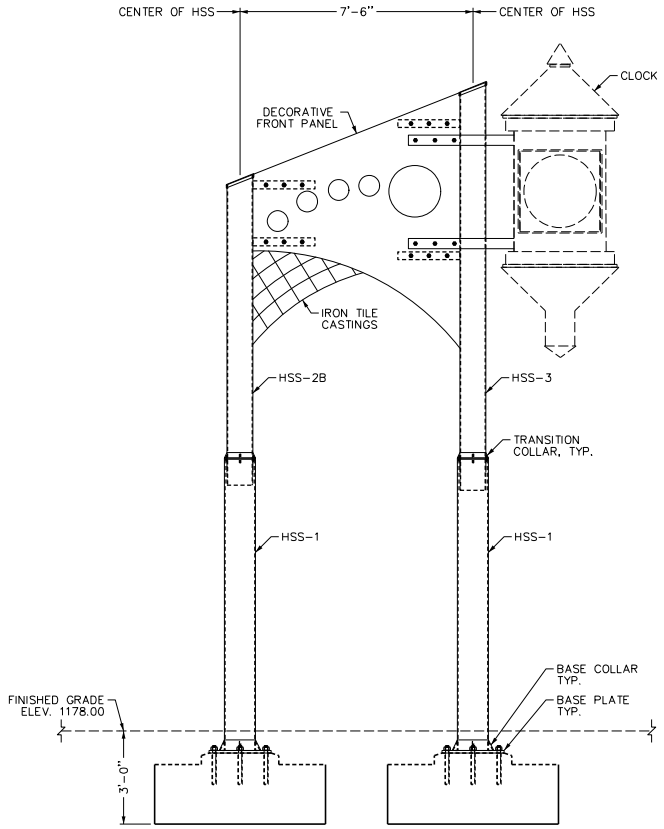

SIDE 2B VIEW

NOTE:
IRON TILE CASTINGS ON ALL HSS-1's NOT SHOWN FOR CLARITY.

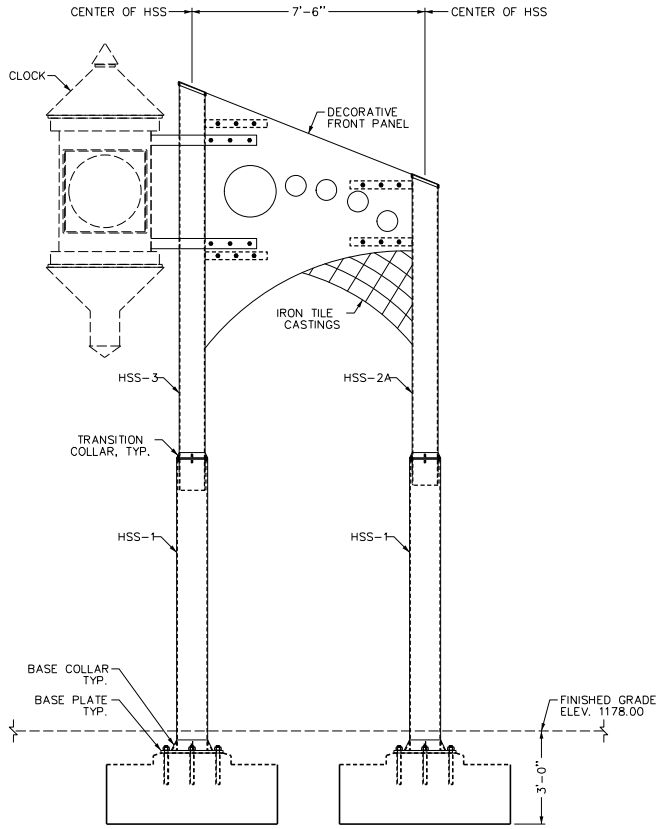

SIDE 2A VIEW

SIDE ELEVATION VIEWS

NORTH CAROLINA
PROFESSIONAL ENGINEER
SEAL
034955
TIMOTHY J. TOMMASINO
8/5/2026

Date

Revisions

Issue Date: 07/29/2026
Drawn By: EKW
Designed By: TJT
Checked By: TJT
Date: 07/29/26

Mattern & Craig
ENGINEERS - SURVEYORS
231 19th AVENUE NE
HICKORY, NORTH CAROLINA 28601
(828) 855-1133
FAX (828) 855-1133

CITY OF LENOIR - CLOCK TOWER

STRUCTURE SIDE ELEVATIONS

CITY OF LENOIR, NORTH CAROLINA

Vertical Scale: 1/2" = 1'-0"
Horizontal Scale: 1/2" = 1'-0"
Commission Number: 4322E
Sheet No.: S-2

Docusign Envelope ID: 8785CF57-C343-58ED-61DD-3F697CA33B90

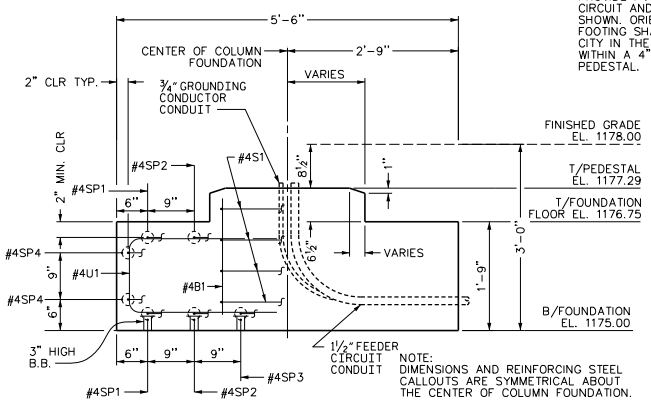

NOTE:
PROVIDE PVC CONDUIT FOR FEEDER CIRCUIT AND GROUNDING CIRCUIT AS SHOWN. ORIENTATION OF OUTLET OF FOOTING SHALL BE VERIFIED BY THE CITY IN THE FIELD. CONDUITS SHALL BE WITHIN A 4" CIRCLE CENTERED ON THE PEDESTAL.

NOTE:
DIMENSIONS AND REINFORCING STEEL CALLOUTS ARE SYMMETRICAL ABOUT THE CENTER OF COLUMN FOUNDATION.

TYP. COLUMN FOUNDATION SECTION

SCALE: 1" = 1'-0"

BAR TYPES

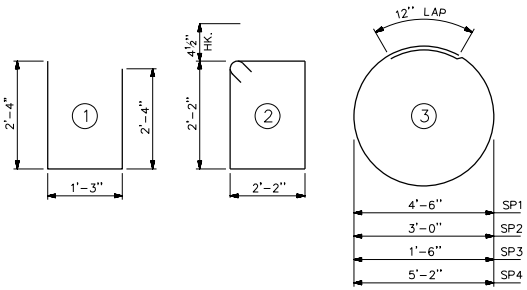

ALL BAR DIMENSIONS ARE OUT TO OUT.

BILL OF MATERIAL
FOR TOWER FOUNDATION

BAR	NO.	SIZE	TYPE	LENGTH	WEIGHT
B1	36	#4	STR	1'-11"	46
S1	12	#4	2	9'-5"	75
SP1	6	#4	3	15'-2"	60
SP2	6	#4	3	10'-6"	42
SP3	3	#4	3	5'-9"	12
SP4	6	#4	3	17'-3"	69
U1	48	#4	1	5'-11"	190

REINFORCING STEEL 493 LBS.

CLASS A CONCRETE 5.0 C.Y.

1" DIA. ANCHOR BOLTS NO. 24

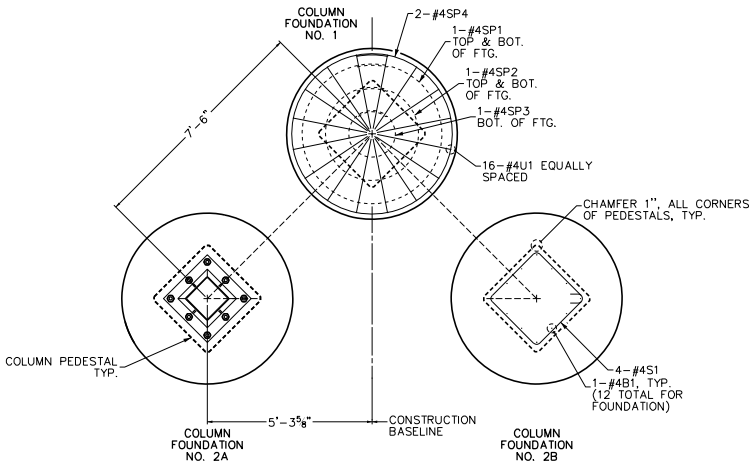

SUBSTRUCTURE PLAN 1

SCALE: ½" = 1'-0"

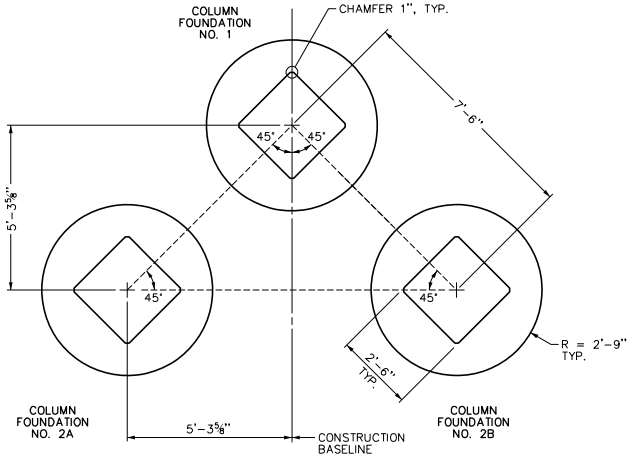

SUBSTRUCTURE LAYOUT

SCALE: ½" = 1'-0"

SHEET NOTES:

1. REINFORCING STEEL MAY BE SHIFTED SLIGHTLY TO AVOID CONFLICT WITH THE CONDUITS AND ANCHOR BOLTS.

2. ANCHOR BOLTS SHALL BE CAST INTO THE FOUNDATION. DRILLING AND ANCHORING OF ANCHOR BOLTS IS NOT ALLOWED. THE CONTRACTOR SHALL MAKE/OBTAIN A TEMPLATE OF THE ACTUAL ANCHOR BOLTS LOCATIONS BASED ON THE AS CONSTRUCTED TOWER BASE PLATES, TO LOCATE THE ANCHOR BOLTS.

3. DIMENSIONS AND REINFORCING STEEL IS SIMILAR FOR ALL FOUNDATION ELEMENTS.

NORTH CAROLINA PROFESSIONAL ENGINEER SEAL 34955 TIMOTHY J. TOMASINO
8/5/2026

Date

Revisions

Issue Date: 07/29/2026
Drawn By: EKW
Designed By: TJT
Checked By: TJT
Date: 07/29/26

Mattern & Craig
ENGINEERS - SURVEYORS
231 19th AVENUE NE
HICKORY, NORTH CAROLINA 28601
(828) 855-0921
FAX (828) 855-1133

CITY OF LENOIR - CLOCK TOWER
FOUNDATION DETAILS
CITY OF LENOIR, NORTH CAROLINA

Vertical Scale: AS NOTED
Horizontal Scale: AS NOTED
Commission Number: 4322E
Sheet No.:
S-3

The City of Lenoir Public Works Department
Lenoir, North Carolina

Specifications and Rebid Documents

for

Clock Tower Foundation Project

Commission No. 4322E

Document Date: August 28, 2026

Bid Date: September 11, 2026 @ 10:00 AM

Mattern & Craig
Engineers – Surveyors
231 16th Ave NE
Hickory, NC 28601
Engineer: Brian Newman, PE
brnewman@matternandcraig.com
(828) 855-2233

Copyright© 2018 National Society of Professional Engineers, American Council of Engineering Companies, and American Society of Civil Engineers. All rights reserved.

Bid Form for Construction Contract

The terms used in this Bid with initial capital letters have the meanings stated in the Instructions to Bidders, the General Conditions, and the Supplementary Conditions.

ARTICLE 1—OWNER AND BIDDER

1.01 This Bid is submitted to:

Jon Hogan

Public Works Department

510-B Greer Cir SW

Lenoir, NC 28645

1.02 The undersigned Bidder proposes and agrees, if this Bid is accepted, to enter into an Agreement with Owner in the form included in the Bidding Documents to perform all Work as specified or indicated in the Bidding Documents for the prices and within the times indicated in this Bid and in accordance with the other terms and conditions of the Bidding Documents.

ARTICLE 2—ATTACHMENTS TO THIS BID

2.01 The following documents are submitted with and made a condition of this Bid:

A. Required Bid security

B. List of Proposed Subcontractors

C. List of Proposed Suppliers

D. Evidence of authority to do business in the state of the Project; or a written covenant to obtain such authority within the time for acceptance of Bids

E. Contractor's license number as evidence of Bidder's State Contractor's License or a covenant by Bidder to obtain said license within the time for acceptance of Bids

ARTICLE 3—BASIS OF BID—LUMP SUM BID AND UNIT PRICES

3.01 *Lump Sum Bids*

A. Bidder will complete the Work in accordance with the Contract Documents for the following lump sum (stipulated) price(s), together with any Unit Prices indicated in Paragraph 3.02:

1. Lump Sum Prices (Base Bid)

1	Mobilization @5%	LS	$ 4,600.00
2	Foundation and Sidewalks	LS	$ 82,287.00
5	Traffic Control	LS	$ 4,950.00
Total of All Lump Sum Bid Items			$ 91,837.00

Copyright© 2018 National Society of Professional Engineers, American Council of Engineering Companies, and American Society of Civil Engineers. All rights reserved.

3.02 Total Bid Price (Lump Sum)

Total Bid Price (Total of all Lump Sum Bids)	$ NINETY ONE THOUSAND
EIGHT HUNDRED THIRTY SEVEN DOLLARS	($ 91,837.00)
(Printed Words)	**(Numbers)**

ARTICLE 4—TIME OF COMPLETION

4.01 Bidder agrees that the Work will be substantially complete and will be completed and ready for final payment in accordance with Paragraph 15.06 of the General Conditions on or before the dates or within the number of calendar days indicated in the Agreement.

4.02 Bidder agrees that the Work will be substantially complete within **60** calendar days after the date when the Contract Times commence to run as provided in Paragraph 4.01 of the General Conditions, and will be completed and ready for final payment in accordance with Paragraph 15.06 of the General Conditions within **75** calendar days after the date when the Contract Times commence to run.

4.03 Bidder accepts the provisions of the Agreement as to liquidated damages.

ARTICLE 5—BIDDER'S ACKNOWLEDGEMENTS: ACCEPTANCE PERIOD, INSTRUCTIONS, AND RECEIPT OF ADDENDA

5.01 *Bid Acceptance Period*

A. This Bid will remain subject to acceptance for 60 days after the Bid opening, or for such longer period of time that Bidder may agree to in writing upon request of Owner.

5.02 *Instructions to Bidders*

A. Bidder accepts all of the terms and conditions of the Instructions to Bidders, including without limitation those dealing with the disposition of Bid security.

5.03 *Receipt of Addenda*

A. Bidder hereby acknowledges receipt of the following Addenda:

Addendum Number	Addendum Date
N/A	

ARTICLE 6—BIDDER'S REPRESENTATIONS AND CERTIFICATIONS

6.01 *Bidder's Representations*

A. In submitting this Bid, Bidder represents the following:

1. Bidder has examined and carefully studied the Bidding Documents, including Addenda.
2. Bidder has visited the Site, conducted a thorough visual examination of the Site and adjacent areas, and become familiar with the general, local, and Site conditions that may affect cost, progress, and performance of the Work.
3. Bidder is familiar with all Laws and Regulations that may affect cost, progress, and performance of the Work.

Copyright© 2018 National Society of Professional Engineers, American Council of Engineering Companies, and American Society of Civil Engineers. All rights reserved.

4. Bidder has carefully studied the reports of explorations and tests of subsurface conditions at or adjacent to the Site and the drawings of physical conditions relating to existing surface or subsurface structures at the Site that have been identified in the Supplementary Conditions, with respect to the Technical Data in such reports and drawings.

5. Bidder has carefully studied the reports and drawings relating to Hazardous Environmental Conditions, if any, at or adjacent to the Site that have been identified in the Supplementary Conditions, with respect to Technical Data in such reports and drawings.

6. Bidder has considered the information known to Bidder itself; information commonly known to contractors doing business in the locality of the Site; information and observations obtained from visits to the Site; the Bidding Documents; and the Technical Data identified in the Supplementary Conditions or by definition, with respect to the effect of such information, observations, and Technical Data on (a) the cost, progress, and performance of the Work; (b) the means, methods, techniques, sequences, and procedures of construction to be employed by Bidder, if selected as Contractor; and (c) Bidder's (Contractor's) safety precautions and programs.

7. Based on the information and observations referred to in the preceding paragraph, Bidder agrees that no further examinations, investigations, explorations, tests, studies, or data are necessary for the performance of the Work at the Contract Price, within the Contract Times, and in accordance with the other terms and conditions of the Contract.

8. Bidder is aware of the general nature of work to be performed by Owner and others at the Site that relates to the Work as indicated in the Bidding Documents.

9. Bidder has given Engineer written notice of all conflicts, errors, ambiguities, or discrepancies that Bidder has discovered in the Bidding Documents, and of discrepancies between Site conditions and the Contract Documents, and the written resolution thereof by Engineer is acceptable to Contractor.

10. The Bidding Documents are generally sufficient to indicate and convey understanding of all terms and conditions for performance and furnishing of the Work.

11. The submission of this Bid constitutes an incontrovertible representation by Bidder that without exception the Bid and all prices in the Bid are premised upon performing and furnishing the Work required by the Bidding Documents.

6.02 *Bidder's Certifications*

A. The Bidder certifies the following:

1. This Bid is genuine and not made in the interest of or on behalf of any undisclosed individual or entity and is not submitted in conformity with any collusive agreement or rules of any group, association, organization, or corporation.

2. Bidder has not directly or indirectly induced or solicited any other Bidder to submit a false or sham Bid.

3. Bidder has not solicited or induced any individual or entity to refrain from bidding.

4. Bidder has not engaged in corrupt, fraudulent, collusive, or coercive practices in competing for the Contract. For the purposes of this Paragraph 8.02.A:

a. Corrupt practice means the offering, giving, receiving, or soliciting of anything of value likely to influence the action of a public official in the bidding process.

Copyright© 2018 National Society of Professional Engineers, American Council of Engineering Companies, and American Society of Civil Engineers. All rights reserved.

b. Fraudulent practice means an intentional misrepresentation of facts made (a) to influence the bidding process to the detriment of Owner, (b) to establish bid prices at artificial non-competitive levels, or (c) to deprive Owner of the benefits of free and open competition.

c. Collusive practice means a scheme or arrangement between two or more Bidders, with or without the knowledge of Owner, a purpose of which is to establish bid prices at artificial, non-competitive levels.

d. Coercive practice means harming or threatening to harm, directly or indirectly, persons or their property to influence their participation in the bidding process or affect the execution of the Contract.

BIDDER hereby submits this Bid as set forth above:

Bidder:

G&M STRUCTURES LLC
(typed or printed name of organization)

By: Rodney L. Green
(individual's signature)

Name: Rodney Green
(typed or printed)

Title: Member Manager
(typed or printed)

Date: September 11, 2026
(typed or printed)

If Bidder is a corporation, a partnership, or a joint venture, attach evidence of authority to sign.

Attest: Kelly R. Ritchie
(individual's signature)

Name: Kelly Ritchie
(typed or printed)

Title:
(typed or printed)

Date: 9/11/2026
(typed or printed)

Address for giving notices:

Copyright© 2018 National Society of Professional Engineers, American Council of Engineering Companies, and American Society of Civil Engineers. All rights reserved.

BID BOND (PENAL SUM FORM)

Bidder	**Surety**
Name: G&M Structures, LLC Address *(principal place of business)*: 5270 NC Hwy 127 Taylorsville, NC 28381	Name: United Fire & Casualty Company Address *(principal place of business)*: P. O. Box 73909 Cedar Rapids, IA 52407-3909
Owner	**Bid**
Name: City of Lenoir Address *(principal place of business)*: 510-B Greer Circle SW Lenoir, NC 28645	Project *(name and location)*: Clock Tower Foundation Project, Commission No. 4322E, Lenoir, NC Bid Due Date: September 11, 2026

Bond

Penal Sum: Five Percent of Amount Bid (5% of Bid)

Date of Bond: September 11, 2026

Surety and Bidder, intending to be legally bound hereby, subject to the terms set forth in this Bid Bond, do each cause this Bid Bond to be duly executed by an authorized officer, agent, or representative.

Bidder	Surety
G&M Structures, LLC *(Full formal name of Bidder)*	United Fire & Casualty Company *(Full formal name of Surety) (corporate seal)*
By: Rodney Green *(Signature)*	By: Matthew Rose *(Signature) (Attach Power of Attorney)*
Name: Rodney Green *(Printed or typed)*	Name: Matthew Rose *(Printed or typed)*
Title: Member Manager	Title: Attorney-in-Fact
Attest: Kelly R. Ritchie *(Signature)*	Attest: TT *(Signature)*
Name: Kelly Ritchie *(Printed or typed)*	Name: Tyler Turnbull *(Printed or typed)*
Title:	Title: Attorney-in-Fact

Notes: (1) Note: Addresses are to be used for giving any required notice. (2) Provide execution by any additional parties, such as joint venturers, if necessary.

EJCDC® C-430, Bid Bond (Penal Sum Form).
Copyright© 2018 National Society of Professional Engineers, American Council of Engineering Companies, and American Society of Civil Engineers. All rights reserved.

1. Bidder and Surety, jointly and severally, bind themselves, their heirs, executors, administrators, successors, and assigns to pay to Owner upon default of Bidder the penal sum set forth on the face of this Bond. Payment of the penal sum is the extent of Bidder's and Surety's liability. Recovery of such penal sum under the terms of this Bond will be Owner's sole and exclusive remedy upon default of Bidder.
2. Default of Bidder occurs upon the failure of Bidder to deliver within the time required by the Bidding Documents (or any extension thereof agreed to in writing by Owner) the executed Agreement required by the Bidding Documents and any performance and payment bonds required by the Bidding Documents.
3. This obligation will be null and void if:
   3.1. Owner accepts Bidder's Bid and Bidder delivers within the time required by the Bidding Documents (or any extension thereof agreed to in writing by Owner) the executed Agreement required by the Bidding Documents and any performance and payment bonds required by the Bidding Documents, or
   3.2. All Bids are rejected by Owner, or
   3.3. Owner fails to issue a Notice of Award to Bidder within the time specified in the Bidding Documents (or any extension thereof agreed to in writing by Bidder and, if applicable, consented to by Surety when required by Paragraph 5 hereof).
4. Payment under this Bond will be due and payable upon default of Bidder and within 30 calendar days after receipt by Bidder and Surety of written notice of default from Owner, which notice will be given with reasonable promptness, identifying this Bond and the Project and including a statement of the amount due.
5. Surety waives notice of any and all defenses based on or arising out of any time extension to issue Notice of Award agreed to in writing by Owner and Bidder, provided that the total time for issuing Notice of Award including extensions does not in the aggregate exceed 120 days from the Bid due date without Surety's written consent.
6. No suit or action will be commenced under this Bond prior to 30 calendar days after the notice of default required in Paragraph 4 above is received by Bidder and Surety, and in no case later than one year after the Bid due date.
7. Any suit or action under this Bond will be commenced only in a court of competent jurisdiction located in the state in which the Project is located.
8. Notices required hereunder must be in writing and sent to Bidder and Surety at their respective addresses shown on the face of this Bond. Such notices may be sent by personal delivery, commercial courier, or by United States Postal Service registered or certified mail, return receipt requested, postage pre-paid, and will be deemed to be effective upon receipt by the party concerned.
9. Surety shall cause to be attached to this Bond a current and effective Power of Attorney evidencing the authority of the officer, agent, or representative who executed this Bond on behalf of Surety to execute, seal, and deliver such Bond and bind the Surety thereby.
10. This Bond is intended to conform to all applicable statutory requirements. Any applicable requirement of any applicable statute that has been omitted from this Bond will be deemed to be included herein as if set forth at length. If any provision of this Bond conflicts with any applicable statute, then the provision of said statute governs and the remainder of this Bond that is not in conflict therewith continues in full force and effect.
11. The term "Bid" as used herein includes a Bid, offer, or proposal as applicable.

Copyright© 2018 National Society of Professional Engineers, American Council of Engineering Companies, and American Society of Civil Engineers. All rights reserved.

UNITED FIRE & CASUALTY COMPANY, CEDAR RAPIDS, IA
UNITED FIRE & INDEMNITY COMPANY, DALLAS, TX
FINANCIAL PACIFIC INSURANCE COMPANY, ROSEVILLE, CA

POWER OF ATTORNEY

To verify the authenticity of this Power of Attorney, please contact us at
UFG Insurance, 118 Second Ave SE, Cedar Rapids, IA 52401
telephone (800) 343-9130 or email *surety@unitedfiregroup.com*
THIS POWER OF ATTORNEY IS VOID IF ALTERED
To notify us of a claim, please contact us at *surety@unitedfiregroup.com*

KNOW ALL PERSONS BY THESE PRESENTS, that United Fire & Casualty Company, a corporation duly organized and existing under the laws of the State of Iowa; United Fire & Indemnity Company, a corporation duly organized and existing under the laws of the State of Texas; and Financial Pacific Insurance Company, a corporation duly organized and existing under the laws of the State of California (herein collectively called the Companies), and having their corporate headquarters in Cedar Rapids, State of Iowa, does make, constitute and appoint

TYLER TURNBULL, BEVERLY B. IVEY, DELLA B. CASE, MATTHEW ROSE, SCOTT PELIN, BRETT BRANTON, MICHELE MILLER, JIMMY SOUSA, LYDIA CASE, EACH INDIVIDUALLY

---

their true and lawful Attorney(s)-in-Fact with power and authority hereby conferred to sign, seal and execute in its behalf all lawful bonds, undertakings and other obligatory instruments of similar nature provided that no single obligation shall exceed $25,000,000.00 and to bind the Companies thereby as fully and to the same extent as if such instruments were signed by the duly authorized officers of the Companies and all of the acts of said Attorney, pursuant to the authority hereby given and hereby ratified and confirmed.

The Authority hereby granted by United Fire & Casualty Company, United Fire & Indemnity Company, and Financial Pacific Insurance Company shall expire as of the 21st day of March, 2027 unless sooner revoked. This Power of Attorney has been duly made, executed and delivered pursuant to, and in accordance with, the articles of incorporation, bylaws, and other governing documents of each of the respective Companies, and by the authority therein granted and under applicable corporate law. The signature of any officer authorized hereby, and the Corporate seal, may be affixed by facsimile to any power of attorney or certification of either authorized hereby; such signature and seal, when so used, being adopted by the Companies as the original signature of such officer and the original seal of the Companies, to be valid and binding upon the Companies with the same force and effect as though manually affixed.
IN WITNESS WHEREOF, the COMPANIES have each caused these presents to be signed by its officer and its corporate seal to be hereto affixed this 21st day of March, 2025.

By: _____
Kyanna M. Saylor, Vice President of
United Fire & Casualty Company
United Fire & Indemnity Company
Financial Pacific Insurance Company

State of Iowa, County of Linn, ss:
On this 21st day of March, 2025 before me personally came Kyanna M. Saylor to me known, who being by me duly sworn, did depose and say; that she is a Vice President of UNITED FIRE & CASUALTY COMPANY, a Vice President of UNITED FIRE & INDEMNITY COMPANY, and a Vice President of FINANCIAL PACIFIC INSURANCE COMPANY, the corporations described in and which executed the above instrument; that she knows the seal of said corporations; that the seals affixed to the said instrument are such corporate seals; that these seals were so affixed pursuant to authority given by the Boards of Directors of said corporations and that she signed her name thereto pursuant to like authority, and acknowledges same to be the act and deed of said corporations.

Judith A. Jones
Iowa Notarial Seal
Commission number 173041
My Commission Expires 04/23/2027

Notary Public: _____

My commission expires: 04/23/2027

I, Mary A. Bertsch, do hereby certify that I have compared the foregoing copy of the Power of Attorney and affidavit, and that the said Power of Attorney has not been revoked and is now in full force and effect.

In testimony whereof I have hereunto subscribed my name and affixed the corporate seal of each said Company this 11th day of September, 2026.

By: _____
Mary A. Bertsch, Assistant Secretary of
United Fire & Casualty Company
United Fire & Indemnity Company
Financial Pacific Insurance Company

BPOA0045 012026

Expiration Date

2026

License No.

107789

North Carolina

Licensing Board for General Contractors

This is to Certify That:

G&M STRUCTURES, LLC

Taylorsville, NC

is duly registered and entitled to practice

General Contracting

Limitation: Unlimited

Classification: Building

until

December 31, 2026

when this Certificate expires.

Witness our hands and seal of the Board.

Dated, Raleigh, N.C.

01/01/2026

This certificate may not be altered.

Chairman

Secretary-Treasurer

CITY MANAGER
SCOTT E. HILDEBRAN

CITY OF LENOIR
NORTH CAROLINA

MAYOR
JOSEPH L. GIBBONS

CITY COUNCIL
J. T. BEAL
R.C. DELLINGER
J. I. PERKINS
R. S. PRESTWOOD
K. R. ROGERS
D. F. STEVENS
C. D. THOMAS

RESOLUTION AUTHORIZING THE ACCEPTANCE OF A U.S. ENVIRONMENTAL PROTECTION AGENCY (EPA) BROWNFIELDS GRANT IN AN AMOUNT OF $500,000, AND AUTHORIZING EXECUTION OF ALL ASSOCIATED DOCUMENTS

WHEREAS, the United States Environmental Protection Agency (EPA) administers the Brownfields Program to provide funding to local governments to assess, safely clean up, and sustainably reuse brownfields properties; and

WHEREAS, the City of Lenoir previously submitted an application for an EPA Brownfields Cleanup Grant to fund environmental cleanup activities at 1429 College Avenue SW and Virginia Street, Lenoir, NC 29645 (Census Tract 37027030300), a 14.8-acre site that operated as a furniture manufacturing complex from the early 1900s to 2007; and

WHEREAS, the U.S. EPA has officially notified the City of Lenoir that it has been selected to receive a grant award in the amount of $500,000; and

WHEREAS, these grant funds will allow the City to conduct vital community outreach, site inventories, environmental site assessments, or remediation to promote public health and economic revitalization; and

WHEREAS, the acceptance of this grant requires the execution of an EPA Cooperative Agreement and adherence to federal pre-award and reporting guidelines; and

NOW, THEREFORE, BE IT RESOLVED BY THE CITY COUNCIL OF THE CITY OF LENOIR, THAT:

1. The City Council hereby formally accepts the U.S. EPA Brownfields Grant in the amount of $500,000, and
2. The City Manager, or his/her designee, is hereby authorized and directed to execute, and submit the EPA Cooperative Agreement, work plans, and all subsequent contracts, amendments, or progress reports required to implement the grant program.

This Resolution shall take effect immediately upon its passage and adoption, this the 15th day of September, 2026.

SEAL

Joseph L. Gibbons, Mayor

ATTEST:

Lauren Hartley, City Clerk

STATE OF NORTH CAROLINA COUNTY OF CALDWELL

AGREEMENT TO ACCEPT AND TREAT MUNICIPAL WASTEWATER TREATMENT FACILITY SLUDGE

THIS CONTRACT is made and entered into this 15th day of September, 2026 by and between the City of Lenoir, a North Carolina Municipal Corporation hereinafter referred to as "Lenoir" and the Town of Blowing Rock, a North Carolina Municipal Corporation hereinafter referred to as "Blowing Rock".

WITNESSETH

WHEREAS, Lenoir and Blowing Rock are political subdivisions of the State of North Carolina, both having the power and authority to enter into this agreement, and the signatories hereto have been authorized to execute this document on behalf of the Lenoir City Council and the Blowing Rock Town Council; and

WHEREAS, Lenoir currently owns and operates the Lower Creek Wastewater Treatment Facility (LCWWTF) and is engaged in the enterprise of managing, operating, and maintaining said facility and the biosolid residuals generated by such operation; and

WHEREAS, Blowing Rock owns and operates a wastewater treatment facility, and is also engaged in the enterprise of managing, operating, and maintaining the facility; and

WHEREAS, Lenoir and Blowing Rock mutually desire to enter into an agreement to provide for the acceptance and treatment of sludge generated by the Blowing Rock wastewater treatment facility in accordance with the terms and provisions contained herein; and

WHEREAS, Lenoir has determined that it has the capability to accept the wastewater treatment sludge throughout the term of this agreement without impairing the treatment capabilities of the Lower Creek Wastewater Treatment Facility; and

WHEREAS, Lenoir and Blowing Rock have or hold and will continue to have or hold throughout the term of this agreement, all appropriate permits necessary to effectuate their respective responsibilities under this agreement or will use their best efforts to obtain such permits;

NOW THEREFORE, in consideration of the mutual covenants, conditions and terms contained herein, the parties hereto, intending to be legally bound hereby, agree as follows:

1. This agreement will commence on the 15th day of September, 2026, and unless earlier terminated in accordance with the terms herein, will expire on the 30th day of June, 2035 (Hereinafter referred to as the "Wastewater Service Period").

2. Lenoir agrees to accept up to three (3) tanker loads (not to exceed 3,750 gallons per load) of sludge from the Blowing Rock Wastewater Treatment Facility per week (not to exceed 9,000 gallons per week) during the term of this agreement. Sludge received from Blowing Rock will be discharged directly into the discharge area that is pumped directly to the sludge holding tank.

3. Blowing Rock will not exceed the above gallons per tanker load (or 9,000 gallons per week) and a maximum of three (3) tanker loads per week provided for in Section 2 of this agreement, unless Lenoir expressly agrees in advance in writing that said maximum weekly loads and gallons per load may exceed the terms set forth for a specified period of time.

4. ~~The wastewater sludge received from Blowing Rock must be in liquid form and~~ must not have a concentration of more than 1.5% solids. The pH must not be less than 5.5 or greater than 8.0. These test results must be provided to the lab by Blowing Rock to Lenoir staff, daily, on all tanker loads.

5. To monitor sludge quality at the LCWWTF, Blowing Rock will fund and perform testing to evaluate the quality and constituents of the sludge being accepted at the LCWWTF. Depending on results of the testing, Blowing Rock will perform this testing at a minimum of annually or a maximum of quarterly. This testing is required and will be conducted in accordance with acceptable industry standards and the North Carolina Department of Environmental Quality (NCDEQ) guidelines for the following parameters:
   - TCLP (Toxicity Characteristics Leaching Procedure)
   - Arsenic, Cadmium, Chromium, Copper, Lead, Mercury, Nickel, Selenium, Silver, and Zinc
   - Cyanide
   - Total Phosphorus
   - Percent (%) Solids

   Within seven (7) days of receiving the results of these tests, the Town of Blowing Rock must email or mail a copy to the City of Lenoir Wastewater Treatment Facility Superintendent. Should Lenoir's permit limits change, Blowing Rock will immediately adjust testing accordingly.

6. Blowing Rock will timely pay Lenoir for the gallons of treated sludge on a monthly basis, in accordance with invoices, or by purchase of coupons from Lenoir for septic waste haulers, which will be based upon the capacity of the tanker or the actual gallons disposed of at the LCWWTF. Blowing Rock will pay Lenoir the amounts of each such monthly invoice within 30 calendar days of the date of each invoice.

7. The initial per gallon rate to be charged to Blowing Rock for the acceptance of

wastewater treatment sludge shall be 20 cents per gallon.

Over the term of this agreement or any extension thereof, Lenoir may, at its sole discretion, increase the initial per gallon rate as it deems necessary. Lenoir will not increase said rates to Blowing Rock more than one time during any fiscal year of twelve (12) months ending on June 30 of each year. Lenoir agrees to notify Blowing Rock in writing of planned increases in rates at least ninety (90) days prior to June 30 of any fiscal year, with rate increases that are to become effective on July 1 of that same year.

8. Blowing Rock will provide a minimum of three months advance written notice to Lenoir prior to the expiration of this agreement or subsequent extensions of this agreement if Blowing Rock desires to extend the terms of this agreement. Upon timely receipt of such notice of Blowing Rock's desire to extend this agreement, Lenoir will, within sixty (60) days after having received such notification, notify Blowing Rock in writing of its acceptance of the extension of this agreement.

9. In the event that Lenoir elects not to extend this agreement, Lenoir will continue to accept and provide sludge treatment to Blowing Rock, under the same terms of the agreement, until Blowing Rock has had sufficient opportunity to secure an alternate source(s) of sludge disposal and treatment; however, Lenoir will not be bound to continue to provide sludge acceptance and treatment to Blowing Rock beyond a period of twelve (12) months past the date of its written notification to Blowing Rock of its intention not to extend this agreement.

10. In the event of damage or destruction of Lenoir's LCWWTF or any emergency which, in the reasonable judgment of Lenoir, is likely to result in material loss or damage to the system or constitute a material threat to human health or safety, Lenoir may suspend operation of its wastewater treatment facility. Lenoir's response to emergencies and other such unusual circumstances will be in accordance with applicable policies, regulations, laws and requirements and with such personnel and equipment as necessary to maintain or restore the operations of its wastewater treatment facility in a timely manner with the least possible disruption or inconvenience.

11. Lenoir and Blowing Rock both represent that no litigation is pending or threatened against them which would impair their ability to perform their respective duties and obligations under the terms, covenants and provisions of this agreement.

12. Resolution of Disputes
Should any disputes arise under this agreement, including but not limited to disputes pertaining to services, rates, or invoices, said disputes will be resolved, when possible, through good faith negotiations between the parties. It is the intent of Lenoir and Blowing Rock that pursuit of legal action will be a remedy of last resort and that a negotiated resolution, including the use of outside experts or mediators, will be the preferred means of resolving disputes

hereunder.

13. Default and Termination
This agreement may be terminated prior to its stated expiration date by Lenoir or Blowing Rock in accordance with the terms and conditions set forth below.

A. Termination for cause by Lenoir. Upon the happening of any of the following events of default by Blowing Rock, Lenoir will have the right to terminate this agreement:

The failure of Blowing Rock to perform or observe any of its material covenants, agreements, obligations and/or duties created by this agreement including but not limited to paragraph 6 hereof.

B. Termination for cause by Blowing Rock. Upon the happening of any of the following events of default by Lenoir, Blowing Rock will have the right to terminate this agreement:

The failure of Lenoir to perform or observe any of its material covenants, agreements, obligations and/or duties created by this agreement.

14. **NOTICES:** To effectuate service of all notices required under this agreement, notices must be served by Certified United States Mail, Postage Prepaid, Return Receipt Requested, Addressed to the Party to whom directed at the address herein set forth or at such other address as may from time to time be designated in writing by either party:

To Lenoir:

City of Lenoir
Wastewater Treatment Superintendent
1905 Broadland Rd, Lenoir, NC 28645

To Blowing Rock:

Town of Blowing Rock

15. This agreement embodies the entire agreement between the parties in connection with this transaction, and there are no oral or parol agreements, representations or inducements existing between the parties relating to this transaction, which are not expressly set forth herein. This agreement may not be modified except by a written agreement signed by all parties to this agreement. Neither party may sell, convey or otherwise alienate the rights and obligations created herein without the prior written permission of the other party to this agreement. This agreement is non-assignable.

16. Nothing contained herein is to be construed to place the parties in the relationship of partners or joint ventures, and neither party has the power to obligate or bind the other party in any manner whatsoever. No joint agency is established by this Agreement pursuant to Article 20, Part 1 of Chapter 160A of the North Carolina General Statutes, by other similar statutory authority authorizing interlocal cooperation between units of local government, or

otherwise.

17. No written waiver by any party to this agreement at any time of any breach of any other provision of this agreement will be deemed a waiver of a breach of any provision herein or consent to any subsequent breach of the same or any other provision.

18. The captions and article numbers appearing in this agreement are inserted only as a matter of convenience and do not define, limit, construe or describe the scope of such paragraphs or articles of this agreement or in any way affect this agreement.

19. This agreement is governed by and interpreted in accordance with the laws of the State of North Carolina.

20. Words of any gender used in this agreement include any other gender, and words in the singular number include the plural, when the sense requires.

21. This agreement may be executed in any number of counterparts, each of which when so executed and delivered will be deemed an original, and it will not be necessary in making proof of this agreement to produce or account for more than one such fully executed counterpart.

22. Except as provided herein, the rights and remedies provided for in this agreement are cumulative and are not exclusive of any rights or remedies that any party may otherwise have at law or in equity.

IN WITNESS WHEREOF, the parties have executed this agreement on the day and year first above written.

CITY OF LENOIR, NORTH CAROLINA

By: _____
Joseph L. Gibbons, Mayor

(SEAL)
Attest:

By: _____
Lauren Hartley, City Clerk

TOWN OF BLOWING ROCK, NORTH CAROLINA

By: _____
Charlie Sellers, Mayor

(SEAL)
Attest:

By: _____
Hilari H. Hubner, Town Clerk

This agreement has been pre-audited in the manner required by the Local Government Budget and Fiscal Control Act.

By: _____
Donna Bean, Finance Director
City of Lenoir, North Carolina

by: _____
Margaret Piercy, Finance Director
Town of Blowing Rock, North Carolina

FY 2025 CAPER SUMMARY

The City of Lenoir receives both Community Development Block Grant (CDBG) Program and HOME Program funding from the U.S. Department of Housing and Urban Development (HUD). One requirement of HUD is the City must complete a Consolidated Annual Performance and Evaluation Report, better known to us as the CAPER. The purpose of the CAPER is to provide an overall evaluation of federally-funded activities and accomplishments to HUD and the community. The performance report is prepared to allow for public review and comment.

The City of Lenoir, North Carolina received $984,230.65 in HOME Program funds from HUD in FY 2025. The City also received an additional $445,772.68 in generated HOME Program Income. The City serves as the lead entity of a 28 local government Unifour HOME Consortium. The City, as Lead Entity of the HOME Consortium, has assisted 34 applicants become homebuyers through its homebuyer assistance program during this reporting period. The City funded 2 different Community Housing Development Organizations (CHDOs) which resulted in the construction of 4 new Habitat homes during this reporting period. The City also funded 2 Multi-Family Apartment Projects which created 126 rental apartment units.

The City of Lenoir, North Carolina received $136,612 in CDBG funds. The City is in the process of using CDBG funding for public facilities improvements at the Old Lenoir High School Campus Complex which is located in low income census tracts.

ATTENTION RESIDENTS OF CITY OF LENOIR

Notice is hereby given that the City of Lenoir and the Unifour HOME Consortium will hold a public hearing to receive public input and comments concerning the proposed FY-2025 Consolidated Annual Performance and Evaluation Report. This report details the activities and expenditures of Community Development Block Grant and HOME funds during the period July 1, 2025 through June 30, 2026.

The public meeting will be Tuesday, September 15, 2026 at 6:00pm, before the Lenoir City Council in the City/County Chambers on the bottom floor of the Caldwell County Office building located at 905 West Avenue, Lenoir, NC.

There will be a 15-day minimum comment period beginning August 29, 2026 and ending September 15, 2026 to obtain citizen input before the report submittal to the US Dept. of HUD.

This meeting is open to the public. Any person with a disability needing special accommodations or non-English speaking persons needing translation services should contact the City of Lenoir at least 48 hours prior to the meeting. For copies of the report or for more information, contact Rick Oxford at the Western Piedmont Council of Governments at (828) 322-9191 extension 245, or 1-(800) 735-2962 TDD.
PUBLISH: August 29, 2026

****

Publish one time only on: August 29, 2026
Non-legal block ad needs to be in body of paper not classified section
Run one time only
Use HUD logos
AFFIDAVIT REQUIRED

Bill & **Affidavit** to: Rick Oxford
WPCOG for **(City of Lenoir CAPER AD)**
P. O. Box 9026
Hickory, NC 28603

Contact: Rick Oxford at (828) 514-9191 for additional information.

.

ATTENTION RESIDENTS OF CITY OF LENOIR

Notice is hereby given that the City of Lenoir and the Unifour HOME Consortium will hold a public hearing to receive public input and comments concerning the proposed FY-2025 Consolidated Annual Performance and Evaluation Report. This report details the activities and expenditures of Community Development Block Grant and HOME funds during the period July 1, 2025 through June 30, 2026.

The public meeting will be Tuesday, September 15, 2026 at 6:00pm, before the Lenoir City Council in the City/County Chambers on the bottom floor of the Caldwell County Office building located at 905 West Avenue, Lenoir, NC.

There will be a 15-day minimum comment period beginning August 29, 2026 and ending September 15, 2026 to obtain citizen input before the report submittal to the US Dept. of HUD.

This meeting is open to the public. Any person with a disability needing special accommodations or non-English speaking persons needing translation services should contact the City of Lenoir at least 48 hours prior to the meeting. For copies of the report or for more information, contact Rick Oxford at the Western Piedmont Council of Governments at (828) 322-9191 extension 245, or 1-(800) 735-2962 TDD.

8/29/26



