AGENDA
City of Lenoir
City Council Meeting
905 West Ave. NW, Lenoir, NC 28645
Tuesday, October 6, 2026 | 6:00 PM

I. Call to Order

A. Moment of Silence & Pledge of Allegiance

B. Special Recognition: Mayor Gibbons will recognize the West Caldwell High School Navy Junior Reserve Officer Training Corps (NJROTC) Color Guard, sponsored by The American Legion, Dysart Kendal, Post 29, who won first place for the fourth consecutive year at the American Legion National Color Guard Competition.

II. Matters Scheduled for Public Hearings

A. Public Hearing; Community Development Block Grant (CDBG) Arrowood Street SE Bridge; A second public hearing will be held to discuss a Community Development Block Grant Disaster Recovery (CDBG-DR) $1,357,984.54 grant request to be submitted to the North Carolina Department of Commerce. This project will replace the damaged Arrowood Street SE Bridge.

B. Public Hearing; Community Development Block Grant (CDBG) Water Treatment Plant Generator; A second public hearing will be held to discuss a Community Development Block Grant Disaster Recovery (CDBG-DR) $4,491,520 grant request to be submitted to the North Carolina Department of Commerce. This project will install a new primary backup generator at the George L. Bernhardt (Lake Rhodhiss) Water Treatment Plant. The plant provides water service to more than 25,000 water customers in Caldwell County.

III. Consent Agenda Items

A. Minutes: Approval of the City Council minutes of the meeting of Tuesday, September 15, 2026, as submitted.

B. Minutes: Approval of the Committee of the Whole minutes of the meeting of Tuesday, September 22, 2026, as submitted.

C. Approval Proposed Updates to the Western Piedmont Council of Governments (WPCOG) Charter and Bylaws; Last updated in 2007, the Charter and Bylaws updates serve to increase transparency and clarity for our local governments. The Executive Committee and the Policy Board unanimously approved and recommended these changes. These updates have also been reviewed by WPCOG legal counsel.

D. 2027 City Council Meeting Schedule: Approval of the 2027 City Council Meeting schedule as submitted.

IV. Requests and Petitions of Citizens

V. Reports and Boards and Commissions

VI. Reports and Recommendations of the City Manager

A. Items of Information

1. **National Night Out will be held on Tuesday, October 6, from 6:00-9:00 p.m.**
2. The Lenoir Business Advisory Board will meet on Thursday, October 8 at 6:00 p.m. at City Hall, Third Floor.
3. The City/County Services Committee will meet on Monday, October 12 at noon at the J.E. Broyhill Civic Center.
4. The Economic Development Advisory Committee will meet on Tuesday, October 13 at 8:15 a.m. at the J.E. Broyhill Civic Center.
5. The ABC Board will meet on Tuesday, October 13 at 2:00 p.m.
6. The Parks and Recreation Board will meet on Monday, October 19 at 6:00 p.m. at the Martin Luther King Jr. Center.

B. Items for Decision

1. Approval Parking Lot Agreement Renewal; Public Parking Lot Agreement Renewal between the City of Lenoir, First Baptist Church of Lenoir, and the County of Caldwell for the property located on the north side of Ashe Avenue behind First Baptist Church (owned by First Baptist Church), as submitted. For use of the property, the City and County will share all costs and expenses equally, on a 50/50 basis, up to $16,500.00 toward the costs of certain improvements to the parking area. The lease will become effective upon execution of all parties for a term of 20 years.

VII. Reports and Recommendations of the City Attorney

VIII. Reports and Recommendations of the Mayor

A. Board Appointment: Mayor Gibbons will recommend Leah Hamilton to be appointed to the Planning Board/Historic Preservation Commission (2029 Unexpired). This appointment will be placed on the October 20 City Council Agenda.

IX. Reports and Recommendations of Council Member

X. Adjournment

Post 29 Color Guard High Lights

On 28 August 2026, the West Caldwell High School Navy Junior Reserve Officer Training Corps Color Guard, sponsored by The American Legion, Dysart Kendal, Post 29, competed in the American Legion National Color Guard Competition held in Louisville Kentucky.

The Color Guard consisted of Cadet/ Lieutenant Aiden Kirby, Cadet/Senior Chief Ethen Cook, Cadet/ Chief Avarie Pena, and Cadet/ Petty Officer Second Class Jayden Munday.

The Color Guard competed against 13 other JROTC Color Guards from across the United States.

The WCHS NJROTC Color Guard took first place, being designated as the American Legion National Champions for the 4th consecutive year.

Also, Cadets Ethan Cook and Aiden Kirby, members of The Sons of the American Legion Squadron 29 and Cadets Avarie Pena and Elizabeth Phasoulous, members of The American Legion Auxiliary Unit 29 competed in the Open Class Color Guard Competition.

They competed against adult Color Guards from Laurel Maryland, Los Angeles California, and Lynchburg Virginia.

The Post 29 team took first place for the third year in a row.

Western Piedmont Council of Governments
1880 Second Avenue NW | Hickory, 28601
PO Box 9026 | Hickory, NC 28603
828.322.9191 | Fax: 828.322.5991 | www.wpcog.org

Creative Regional Solutions Since 1968

TO: Mayor Joseph L. Gibbons
Lenoir City Council
City Manager Scott Hildebran

FROM: Kyle Case, Community & Economic Development Manager, WPCOG
SUBJECT: Public Hearing for a Community Development Block Grant Disaster Recovery (CDBG-DR) Application
DATE: October 06, 2026

In order to submit a North Carolina Community Development Block Grant Disaster Recovery (CDBG-DR) application to the North Carolina Department of Commerce Division of Community Revitalization (DCR), two public hearings are required to notify the citizens of available funding opportunities and allow them to ask questions and make public comments regarding the submission of any application. The city held the first public hearing on February 17, 2026 and this, the second public hearing has been publicly advertised for tonight's meeting.

Background: The City of Lenoir is seeking CDBG-DR funding for the replacement of the Arrowood Street SE Bridge. Constructed in 1960, the Arrowood Street SE Bridge is Caldwell County's highest-priority bridge replacement need and one of only two bridges in the County rated "Poor" by the National Bridge Inventory (NBI), as reported through NCDOT. The City's 2024 Preliminary Engineering Report determined that replacement, rather than repair, is the only appropriate long-term solution. Bridge inspections document significant timber decay, corrosion, loss of bearing area, erosion, and scour-related concerns. Following direct damage from Hurricane Helene, a July 2026 sealed load-rating analysis found deterioration of the timber bent cap system had reduced structural capacity, resulting in a reduction of the recommended load posting from 40 tons to 4 tons, a 90% reduction in load-carrying capacity. This reduction raises serious operational concerns, as typical school buses exceed the revised load rating, forcing school buses accessing Hibriten High School and William Lenoir Middle School as well as other larger vehicles to use a substandard secondary access route that is not designed or constructed to accommodate school bus traffic. This compromised access threatens reliable and safe access for students, faculty, emergency responders, and nearby residents.

Proposed Application: This $1,357,964.54 CDBG-DR application proposes the replacement of the Arrowood Street SE Bridge.

Requested Action: After the public hearing is closed and the City Council is in session, if the Council is so inclined, a motion will be needed for the following actions:

- Approval of the Authorizing Resolution

Sample Language:

I move to approve the Authorizing Resolution to submit a $1,357,964.54 grant application to the North Carolina Department of Commerce Division of Community Revitalization (DCR).

Executive Committee: Randy Burns, Chair | Larry Yoder, Vice Chair | Larry Chapman, Secretary | George B. Holleman, Treasurer | Joseph L. Gibbons, Past Chair | **At-Large Members:** Mike LaBrose | Cole Setzer | Jill Patton | Chris Jernigan | **Executive Director,** Anthony W. Starr

Serving: Alexander County | Taylorsville | Burke County | Connelly Springs | Drexel | Glen Alpine | Hildebran | Morganton | Rutherford College | Valdese | Caldwell County | Cajah's Mountain | Cedar Rock | Gamewell | Granite Falls | Hudson | Lenoir | Rhodhiss | Sawmills | Catawba County | Brookford | Catawba | Claremont | Conover | Hickory | Long View | Maiden | Newton

CITY OF LENOIR
COMMUNITY DEVELOPMENT BLOCK GRANT PROGRAM
NOTICE OF SECOND PUBLIC HEARING

The City of Lenoir is holding a second public hearing to discuss a Community Development Block Grant Disaster Recovery (CDBG-DR) $1,357,984.54 grant request to be submitted to the North Carolina Department of Commerce. This project will replace the damaged Arrowood Street SE Bridge. 100% of the CDBG-DR funds will benefit low- and moderate-income persons.

The Public Hearing will be held at the regularly scheduled meeting on October 6th, 2026, at 6:00 pm in the City Chamber, 905 West Ave NW, Lenoir, NC 28645.

The City of Lenoir holds all public meetings in accessible rooms. All interested persons are invited to attend this hearing. Auxiliary aids will be supplied to the disabled if requested five days prior to the public hearing. Person needing special assistance or non-English speaking persons desiring to participate in this hearing should contact Lauren Hartley, City Clerk, at 828-757-2205 or 1-800-735-0533 (TDD/TTY) for the hearing impaired.

Esta información está disponible en español en en cualquier otro idioma bajo petición. Por favor, pongase encontacto con Kyle Case al 828-485-4285 o en Western Piedmont Council of Governments, 1880 2nd Ave NW, Hickory, NC 28801. De alojamiento para esta solicitud.



Please print above line as soon as possible but no later than September 25, 2026.

Please provide an affidavit.

Non-legal block ad.
Fair Housing
HUD logos.

If you have any questions, please contact Kyle Case at 828.568.5618.

Thank you.

RESOLUTION OF THE CITY OF LENOIR
COMMUNITY DEVELOPMENT BLOCK GRANT APPLICATION
ARROWOOD STREET SE BRIDGE REPLACEMENT PROJECT

WHEREAS, the Lenoir City Council has previously indicated its desire to assist in community development efforts; and,

WHEREAS, the Lenoir City Council has held two public hearings concerning the proposed application for Community Development Block Grant funding to benefit low- and moderate-income residents of the Lenoir community; and,

WHEREAS, the Lenoir City Council wishes the City to pursue a formal application for Community Development Block Grant funding to benefit low-and-moderate income residents through the replacement of the Arrowood Street SE Bridge located between NC-18 and Panther Trail in the City of Lenoir, North Carolina.

WHEREAS, the Lenoir City Council certifies it will meet all federal regulatory and statutory requirements of the Community Development Block Grant Program,

NOW THEREFORE BE IT RESOLVED, BY THE LENOIR CITY COUNCIL:

That Scott Hildebran, City Manager, and successors so titled, is hereby authorized to execute and file an application on behalf of the City of Lenoir with The NC Department of Commerce Division of Community Revitalization (DCR) for approval of a Community Development Block Disaster Recovery Grant for Community Development to benefit low-and-moderate income residents through the replacement of the Arrowood Street SE Bridge located between NC-18 and Panther Trail in the City of Lenoir, North Carolina.

That Scott Hildebran, City Manager, and successors so titled, is hereby authorized and directed to furnish such information as The NC Department of Commerce Division of Community Revitalization (DCR) may request in connection with such application or the project; to make the assurances as contained above; and to execute such other documents as may be required in connection with the application.

That the City of Lenoir has substantially complied or will substantially comply with all Federal, State, and local laws, rules, regulations, and ordinances applicable to the project and to the grants pertaining thereto.

Adopted this the _____ day of _____, 2026 at Lenoir, North Carolina.

_____
MAYOR

ATTEST:

_____
CITY CLERK

Western Piedmont Council of Governments
Creative Regional Solutions Since 1968

1880 Second Avenue NW | Hickory, 28601
PO Box 9026 | Hickory, NC 28603
828.322.9191 | Fax: 828.322.5991 | www.wpcog.org

TO: Mayor Joseph L. Gibbons
Lenoir City Council
City Manager Scott Hildebran

FROM: Kyle Case, Community & Economic Development Manager, WPCOG
SUBJECT: Public Hearing for a Community Development Block Grant Disaster Recovery (CDBG-DR) Application
DATE: October 06, 2026

In order to submit a North Carolina Community Development Block Grant Disaster Recovery (CDBG-DR) application to the North Carolina Department of Commerce Division of Community Revitalization (DCR), two public hearings are required to notify the citizens of available funding opportunities and allow them to ask questions and make public comments regarding the submission of any application. The city held the first public hearing on February 17, 2026 and this, the second public hearing has been publicly advertised for tonight's meeting.

Background: The City of Lenoir is seeking CDBG-DR funding for construction of a new backup generator at the George L. Bernhardt Water Treatment Plant located at 5474 Water Works Road, Granite Falls, NC 28630. This project will provide hazard mitigation and risk reduction addressing an urgent need at the City of Lenoir's water treatment plant and, therefore, safeguard potable water for more than 25,000 customers in Caldwell County. Currently, the Water Treatment Plant relies on a backup generator that is more than 20 years old. During Hurricane Helene, the WTP was without power for more than 2 days and relied solely on the backup generator during that time. Due to the age of the generator and the outdated controls, it had to be cycled on and off in order to synchronize with the electrical grid. While the generator was able to continue providing power to the plant, the cycling impacted the functionality of the pumps and created a high-pressure zone in the system. This led to greater wear and tear on the pumps and other components of the plant and had the potential to impact the water quality. This new generator will enhance the resiliency of the backup system with the old generator remaining in place for redundancy. This will add an extra layer of mitigation and prevent City of Lenoir water customers from potential future outages like those suffered by other regional cities in the wake of Helene.

Proposed Application: This $4,491,520 CDBG-DR application proposes the construction of a new backup generator at the George L. Bernhardt Water Treatment Plant located at 5474 Water Works Road, Granite Falls, NC 28630 to address an urgent need of the City's water system.

Requested Action: After the public hearing is closed and the City Council is in session, if the Council is so inclined, a motion will be needed for the following actions:

- Approval of the Authorizing Resolution

Sample Language:

I move to approve the Authorizing Resolution to submit a $4,491,520 grant application to the North Carolina Department of Commerce Division of Community Revitalization (DCR).

Executive Committee: Randy Burns, Chair | Larry Yoder, Vice Chair | Larry Chapman, Secretary | George B. Holleman, Treasurer | Joseph L. Gibbons, Past Chair | **At-Large Members:** Mike LaBrose | Cole Setzer | Jill Patton | Chris Jernigan | **Executive Director,** Anthony W. Starr

Serving: Alexander County | Taylorsville | Burke County | Connelly Springs | Drexel | Glen Alpine | Hildebran | Morganton | Rutherford College | Valdese | Caldwell County | Cajah's Mountain | Cedar Rock | Gamewell | Granite Falls | Hudson | Lenoir | Rhodhiss | Sawmills | Catawba County | Brookford | Catawba | Claremont | Conover | Hickory | Long View | Maiden | Newton

CITY OF LENOIR
COMMUNITY DEVELOPMENT BLOCK GRANT PROGRAM
NOTICE OF SECOND PUBLIC HEARING

The City of Lenoir is holding a second public hearing to discuss a Community Development Block Grant Disaster Recovery (CDBG-DR) $4,491,520 grant request to be submitted to the North Carolina Department of Commerce. This project will install a new primary backup generator at the George L. Bernhardt (Lake Rhodhiss) Water Treatment Plant located at 5474 Waterworks Rd, Granite Falls, NC 28630. The plant provides water service to more than 25,000 water customers in Caldwell County – a federally declared MID and NC Commerce designated Tier 1 county – many of whom are low-income, elderly, and/or disabled. Should the power fail at the water treatment plant, these customers would be without potable water until power could be restored and any resulting contaminants could be flushed from the system. At least 45% of the CDBG-DR funds will benefit low- and moderate-income persons and address an Urgent Need for a vital utility.

The Public Hearing will be held at the regularly scheduled meeting on Tuesday, October 6, 2026, at 6:00 pm in the City Chamber, 905 West Ave NW, Lenoir, NC 28645.

The City of Lenoir holds all public meetings in accessible rooms. All interested persons are invited to attend this hearing. Auxiliary aids will be supplied to the disabled if requested five days prior to the public hearing. Person needing special assistance or non-English speaking persons desiring to participate in this hearing should contact Lauren Hartley, City Clerk, at 828-757-2205 or 1-800-735-0533 (TDD/TTY) for the hearing impaired.

Esta información está disponible en español en en cualquier otro idioma bajo petición. Por favor, pongase encontacto con Kyle Case al 828-485-4285 o en Western Piedmont Council of Governments, 1880 2nd Ave NW, Hickory, NC 28801. De alojamiento para esta solicitud.



Please print above line no sooner than 25 days or fewer than 10 days prior to the meeting.

Please provide an affidavit.

Non-legal block ad.
Fair Housing
HUD logos.

If you have any questions, please contact Kyle Case at 828.568.5618.

Thank you.

RESOLUTION OF THE CITY OF LENOIR
COMMUNITY DEVELOPMENT BLOCK GRANT APPLICATION
GEORGE L. BERNHARDT WATER TREATMENT PLANT GENERATOR PROJECT

WHEREAS, the Lenoir City Council has previously indicated its desire to assist in community development efforts; and,

WHEREAS, the Lenoir City Council has held two public hearings concerning the proposed application for Community Development Block Grant funding to benefit low- and moderate-income residents and address an urgent need of the Lenoir community; and,

WHEREAS, the Lenoir City Council wishes the City to pursue a formal application for Community Development Block Grant funding to benefit low-and-moderate income residents and address an urgent need through the construction of a backup generator at the George L. Bernhardt Water Treatment Plant located at 5474 Water Works Road, Granite Falls, NC 28630.

WHEREAS, the Lenoir City Council certifies it will meet all federal regulatory and statutory requirements of the Community Development Block Grant Program,

NOW THEREFORE BE IT RESOLVED, BY THE LENOIR CITY COUNCIL:

That Scott Hildebran, City Manager, and successors so titled, is hereby authorized to execute and file an application on behalf of the City of Lenoir with The NC Department of Commerce Division of Community Revitalization (DCR) for approval of a Community Development Block Disaster Recovery Grant for Community Development to benefit low-and-moderate income residents and address an urgent need through the construction of a backup generator at the George L. Bernhardt Water Treatment Plant located at 5474 Water Works Road, Granite Falls, NC 28630.

That Scott Hildebran, City Manager, and successors so titled, is hereby authorized and directed to furnish such information as The NC Department of Commerce Division of Community Revitalization (DCR) may request in connection with such application or the project; to make the assurances as contained above; and to execute such other documents as may be required in connection with the application.

That the City of Lenoir has substantially complied or will substantially comply with all Federal, State, and local laws, rules, regulations, and ordinances applicable to the project and to the grants pertaining thereto.

Adopted this the _____ day of _____, 2026 at Lenoir, North Carolina.

_____
MAYOR

ATTEST:

_____
CITY CLERK

City Council
Meeting Minutes
Tuesday, September 15, 2026
6:00 PM

Present: Mayor Joe Gibbons presiding. Councilmembers present were Jonathan Beal, Rebecca Dellinger, Ralph Prestwood, Kimmie Rogers, David Stevens, Crissy Thomas, City Manager Scott Hildebran, City Clerk Lauren Hartley, and Attorney Timothy Rohr.

City Staff: In attendance was Finance Director Donna Bean, Public Services Public Works Director Jon Hogan, Fire Chief Norman Staines, Police Chief Andy Wilson, Planning Director Hannah Williams, City Parks & Recreation Director Phil Harper, Public Services Public Utilities Director Jeff Church, and Economic Development Main Street Director Brenda Floyd.

Absent Mayor Pro-Tem Ike Perkins, Communication & Public Information Director Joshua Harris

I. Call to Order

A. Mayor Gibbons made the following announcements:

- Constitution Week takes place September 17 to September 23, 2026. A proclamation will be presented to the Daughters of the American Revolution (DAR) on Thursday, September 17, 2026, at 10:00 a.m. at the Charters of Freedom in Downtown.
- The 40th Annual Sculpture Celebration was held and had a great turnout.
- A sign dedication for Rick Pierce will be held on Monday, September 21, 2026, at 5:30 p.m. at the Rotary soccer complex.
- The Caldwell County America 250 Committee is receiving an award from the North Carolina Society of Historians for the permanent historical exhibit located at the Caldwell County Office “Our Story: The History of Caldwell County."

The meeting was opened by a moment of silence and the pledge of allegiance led by Mayor Gibbons.

B. Mayor Gibbons presented a proclamation to Emmanual Lazo, Secretary, Concilio Hispano, Inc., proclaiming the month of September 15 to October 15, 2026, as “National Latino and Hispanic Heritage Month” throughout the City of Lenoir.

Emmanual Lazo spoke about the Proclamation for National Latino and Hispanic Heritage Month and what it means to the community.

II. Matters Scheduled for Public Hearings

There were no public hearings.

III. Consent Agenda Items

Consent Agenda Items

A. Minutes: Approval of the City Council minutes of the meeting of Tuesday, September 1, 2026, as submitted.

B. Approval Bid Award-Clock Tower Foundation Project; The Clock TowerFoundation design was let for bid informally on August 11, 2026, with a closing date of August 28, 2026, at 10:00 am. One bid was received. Therefore, the bid was rejected, and the project was re-advertised on August 28, 2026, bid informally with a closing date of September 11, 2026, at 10:00 am. Following the review of bids submitted, staff recommends awarding the Clock Tower Foundation Project to G&M Structures LLC for the lump sum of $91,837.00. G&M Structures LLC is the lowest, responsive, responsible bidder, is appropriately licensed, and is adequately equipped to perform work of this nature, as submitted.

C. Resolution of Acceptance for Environmental Protection Agency (EPA)Brownfields Clean-up Grant; Approval of a resolution to authorize the acceptance of an Environmental Protection Agency (EPA) Brownfields Clean-up Grant in the amount of $500,000.00. The purpose of the grant is to complete the site clean-up of the old Broyhill property located at the corner of Virginia Street and College Avenue. The project includes the hiring of a duly qualified contractor for the removal of the remaining material to an appropriately approved landfill facility under the direction of the City and MidAtlantic Associates, the City's environmental consultant. Staff recommends approval of the resolution, as submitted.

D. Approval of the City of Lenoir and Town of Blowing Rock Sludge Agreement;The City of Lenoir and the Town of Blowing Rock have had an agreement for the Lower Creek Wastewater Treatment facility to accept municipal wastewater treatment plant sludge from the Town for approximately 30 years. This updated agreement modifies the original agreement to meet current permit requirements. Throughout the term of this agreement, Blowing Rock will continue to hold all appropriate permits necessary to effectuate their responsibilities under the agreement, or will use their best effort to obtain such permits. Lenoir will not increase said rates to Blowing Rock more than one time during any fiscal year of twelve (12) months ending on June 30 of each year. Lenoir agrees to notify Blowing Rock in writing of planned increases in rates at least ninety (90) days prior to June 30 of any fiscal year, with rate increases that are to become effective on July 1 of that same year. Staff recommends approval of the agreement, as submitted.

Councilmember Stevens said the agreement is for 9,000 gallons per week. What is the normal amount for them to submit per week?

City Manager Scott Hildebran said in the past 12 months Blowing Rock has not submitted anything and this agreement is well within the limits.

E. Proclamation; National Latino and Hispanic Heritage Month: Approval of proclamation proclaiming September 15, 2026–October 15, 2026, as "National Latino and Hispanic Heritage Month" throughout the City of Lenoir.

Upon a motion by Councilmember Stevens, City Council voted 6 to 0 to adopt the above listed items (A through E) on the Consent Agenda as listed and recommended.

IV. Requests and Petitions of Citizens

- Esmeralda Ixchajchal, Director of Concilio Hispoano Inc. of 1601 N Main Street thanked Mayor Gibbons and the City Council for recognizing Hispanic and Latino Heritage Month and read the Proclamation for the Spanish community.

V. Reports and Boards and Commissions

Rick Oxford, HOME Program Plan Administrator, Western Piedmont Council of Governments will hold a public meeting to receive public input and comments concerning the proposed FY-2025 Consolidated Annual Performance and Evaluation Report. This report details the activities and expenditures of Community Development Block Grant and HOME funds during the period beginning July 1, 2025 through June 30, 2026.

A. Jennifer Cannon, Project Manager Western Piedmont Council of Governments presented the proposed FY-2025 Consolidated Annual Performance and Evaluation Report and said the City of Lenoir receives both Community Development Block Grant (CDBG) Program and HOME Program funding from the U.S. Department of Housing and Urban Development (HUD). One requirement of HUD is that the City must complete a Consolidated Annual Performance and Evaluation Report.

The City of Lenoir received $984,230.65 in HOME Program funds from HUD in FY-2025. The City also received an additional $445,772.68 in generated HOME Program Income. The City serves as the lead entity of 28 local governments, the Unifour HOME Consortium. The City, as Lead Entity of the HOME Consortium, has assisted 34 applicants to become first-time homebuyers.

The City also funded two different Community Housing Development Organizations (CHDOs), which resulted in the construction of four new Habitat homes during this reporting period. The City also funded two Multi-Family Apartment Projects, which created 126 rental apartment units. The City of Lenoir received $136,612 in CDBG funds. The City is in the process of using CDBG funding for public facilities improvements at the Old Lenoir High School Campus Complex, which is located in the low-income census tracts.

Jennifer Cannon said the first-time home buyers program covers four counties and

can provide up to $20,000 to qualified applicants for a purchase of a home. The repayment would be paid back if or when the purchaser sells the home.

Councilmember Stevens said if the home buyer does not sell the home, will the assistance loan be repaid?

Jennifer Cannon said yes, in years 10-100 they will only owe half. If the home buyer sells or the home is passed down to an heir, they will pay it out of the settlement. The repayment then goes back into the program.

No one came forward for public input or comment.

VI. Reports and Recommendations of the City Manager

A. City Manager Scott Hildebran presented the following items of information:

1. The City of Lenoir Litter Sweep day is Thursday, September 17.

2. The ABC Board will meet on Thursday, September 17 at 2:00 p.m.

3. The Parks and Recreation Board will meet on Monday, September 21 at 6:00 p.m. at the Aquatic Fitness Center.

The sign dedication for Rick Pierce will be held on Monday, September 21, 2026, before the meeting at 5:45 p.m. at the Rotary soccer complex.

4. The Parks and Recreation Board will meet on Monday, September 21 at 6:00 p.m. at the Aquatic Fitness Center.

5. The Foothills Regional Airport Authority will meet on Wednesday, September 23 at noon.

6. Friday Night Live concert featuring Wild Canyon Band will be held Friday, September 25, from 7:00 p.m. to 10:00 p.m. at the Downtown Lenoir Stage.

VII. Reports and Recommendations of the City Attorney

There was no report from the City Attorney.

VIII. Reports and Recommendations of the Mayor

There was no report from the Mayor.

IX. Reports and Recommendations of Council Member

There was no report from Councilmembers.

X. Adjournment

There being no further business, Mayor Gibbons adjourned the meeting at 6:28 p.m.

_____ _____

Lauren Hartley, City Clerk Joseph L. Gibbons, Mayor

CITY MANAGER
SCOTT E. HILDEBRAN

CITY OF LENOIR
NORTH CAROLINA

MAYOR
JOSEPH L. GIBBONS

CITY COUNCIL
J. T. BEAL
R.C. DELLINGER
J. I. PERKINS
R. S. PRESTWOOD
K. R. ROGERS
D. F. STEVENS
C. D. THOMAS

PROCLAMATION FOR HISPANIC AND LATINO HERITAGE MONTH BETWEEN CONCILIO HISPANO INC. AND THE CITY OF LENOIR 2026

WHEREAS, the United States of America observes National Latino and Hispanic Heritage Month ("Mes de la Herencia Latina y Hispana") from September 15 to October 15 each year since its inception in 1968; and

WHEREAS, we appreciate the annual opportunity to celebrate the history, culture, and contributions of those residing in the United States whose roots stem from Latin America, the Caribbean, Spain, or Hispanic origins; and

WHEREAS, we are encouraged by the growth of *la Comunidad Latina* ("Latino's Community") in our City and the contributions from la Comunidad Latina in enriching our City; and

WHEREAS, we fully believe that the growth of la Comunidad Latina makes the City of Lenoir a more culturally diverse and welcoming area for anyone who chooses to make the City of Lenoir their home for themselves and their future generations; and

WHEREAS, we are guided *by* the City's motto, "Create With Us", and Concilio's mission in creating a more welcoming hometown, both working in harmony towards a common mission of ensuring that all persons who choose to make Lenoir their home are invited to do so; and

WHEREAS, we reiterate our shared call for community, unity, and protection, confident in our mission and vision for our City and everyone residing within it.

NOW, THEREFORE, I, Joseph L. Gibbons, Mayor of the City of Lenoir and the City Council, do hereby proclaim September 15, 2026 to October 15, 2026 to be **Latino and Hispanic Heritage Month** and calls on all congregations, organizations, businesses, and people within Lenoir and Caldwell County to join us and the community in observing Latino and Hispanic Heritage Month.

IN WITNESS WHEREOF, I have hereunto set my hand and caused the Seal of the City of Lenoir, North Carolina to be affixed this 15th day of September, 2026.

SEAL

Joseph L. Gibbons, Mayor

ATTEST:

Lauren Hartley, City Clerk

Docusign Envelope ID: 49C0A7C7-4856-803D-81DE-6A99A96B70D4

Randy W. Beckner
Bradley C. Craig
Wm. Thomas Austin
James B. Voso
Chad M. Thomas
Jason A. Carder
Brian R. Newman
D. Jason Snapp
Ryan P. Kincer

Mattern & Craig
ENGINEERS • SURVEYORS

Edwin K. Mattern, Jr. (1949-1982)
J. Wayne Craig (1940-2024)
Gene R. Cress (1935-2014)
Sam H. McGhee, III (1940-2018)
Stewart W. Hubbell (Retired)
J. Wayne Craig (Retired)
Michael S. Agee (Retired)
Steven A. Campbell (Retired)
Randy L. Dodson (Retired)

September 11, 2026

Scott Hildebran, City Manager
City of Lenoir
801 West Avenue NW
2nd Floor
Lenoir, NC 28645
shildebran@ci.lenoir.nc.us

Re: Clock Tower Recommendation of Award

Mr. Hildebran:

Informal rebids for the Clock Tower project, were received by the City on September 11, 2026 at 10:00 am. Two bids were received from a total of eight plan holders as noted upon the attached Certified Bid Tabulation.

After final review and verification of the required documents in the bid package provided by the Contractors, the only compliant, bidder was G&M Structures LLC. on this project.

The Certified Bid Tab is included as an enclosure to this letter and hard copies of the Bid Packages were submitted to the City directly and can be forwarded to the City Clerk for your records. The Bid Forms and other required Bid Documents submitted by G&M Structures LLC. on the project have been reviewed by Mattern & Craig and are in conformance with the requested Bid Document requirements.

M&C has provided as enclosures to this letter including the verification of the Contractor's Licensure, Classification, and other attached documents.

M&C evaluated the total Project Bid Price submitted by the Contractor and although this bid is 14% higher the engineer's estimate for the project amount, M&C hereby recommends that the City issue a contract award for the project to G&M Structures LLC, for a total Contract Value of $91,837.00.

Docusign Envelope ID: 49C0A7C7-4856-803D-81DE-6A99A96B70D4

Thank you for allowing Mattern & Craig to assist you with this work. Please feel free to contact me at (828) 855-2233 or brnewman@matternandcraig.com to discuss the Project in greater detail.

Sincerely,
MATTERN & CRAIG

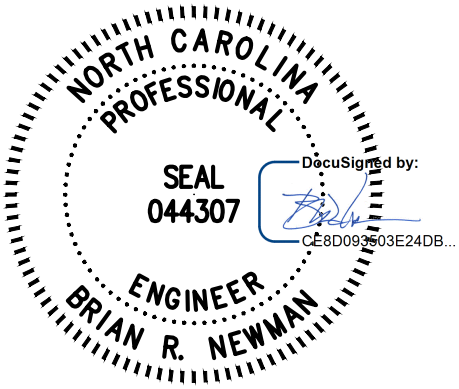

Brian Newman, PE
Principal

Attachments: Engineer's Certified Bid Tabulation
Contractor's Licensure Verification
Evidence of Authority to do Business

Cc: Lauren Hartley, City Clerk – City of Lenoir
Jon Hogan, Director of Public Works – City of Lenoir

Docusign Envelope ID: 49C0A7C7-4856-803D-81DE-6A99A96B70D4

BID SUMMARY for Clock Tower
City of Lenoir
Bid Date: September 11, 2026
Bid Time: 10:00AM

PLANHOLDERS	Bid Security	Subs List	Suppliers List	Business Authority	Contractor's License #	TOTAL BID PRICE	Compliant Bid
ENGINEER'S ESTIMATE	X	X	X	X	X	X	N/A
G&M Structures LLC	X	N/A	N/A	X	107789	$ 91,837.00	Yes
High Country Concrete Services LLC	No	No	No	No	No	$ 49,500.00	No
Wilkie Construction							No Bid
Unique Concrete Services Group LLC							No Bid
Mountain Crest LLC							No Bid
Concrete Bros LLC							No Bid
Brushy Mountain Inc.							No Bid
C&S Concrete Company LLC							No Bid
Apparent Low Bidder: G&M Structures LLC							

I certify that this tabulation is a correct and true representation of the bids received at the above date and time.

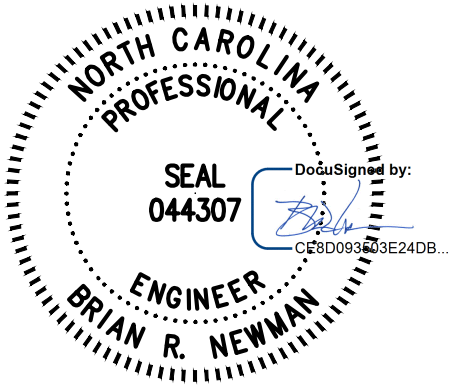

Clock Tower - City of Lenoir
Comm No. 4322E
BID DATE : September 11, 2026
BID TIME: 10:00 AM

	Charter Hills Rd			G&M Structures LLC		High Country Concrete Services LLC	
Item No.	Description	Unit	Estimated Quantity	Bid Unit Price	Bid Amount	Bid Unit Price	Bid Amount
1	Mobilization (5%)	LS	1	$ 4,600.00	$ 4,600.00	$ -	$ -
2	Foundation and Sidewalk	LS	1	$ 82,287.00	$ 82,287.00	$ -	$ -
3	Traffic Control	LS	1	$ 4,950.00	$ 4,950.00	$ -	$ -
			Total of All Lump Sum Bid Items		$ 91,837.00		$ 49,500.00
			Total of All Lump Sum Bid Items		$ 91,837.00		$ 49,500.00

Apparent Low Bidder: ***G&M Structures LLC***

Terms of the Contract Bid Evaluation:

The award of the contract will be made to the lowest responsible bidder as soon as practical. The owner may award on the basis of the Total of All Unit Price Bids for the Total Bid Price.

I certify that this tabulation is a correct and true representation of the bids received at the above date and time.
Brian Newman, PE Mattern & Craig Engineers - Surveyors September 11,2026

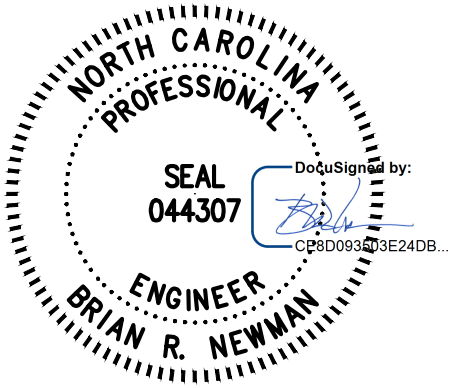

ADVERTISEMENT FOR BIDS

City of Lenoir (Owner) is requesting Bids for the construction of the following Project:

Clock Tower Foundation

Sealed proposals will be received by Jon Hogan until **10:00 am** on **Friday, August 28, 2026**, at **Lenoir Public Works, 501-B Greer Cir SW, Lenoir NC 28645** for construction of Foundation for the Clock Tower and sidewalks at which time and place bids will be opened and read.

The Project includes the following Work: **Removal of existing concrete, Installation of precast or cast in place concrete foundation structures, clearing and grubbing of area which includes minor grading, relocation of 2 pull boxes, additionally form and pour new concrete for sidewalks.**

Bidding Documents may be downloaded from the designated project web link. Prospective Bidders are urged to email the Engineer to register as a plan holder, even if Bidding Documents are obtained from a plan room or source other than the designated link in either electronic or paper format. The designated website will be updated periodically with addenda, lists of registered plan holders, reports, and other information relevant to submitting a Bid for the Project. All official notifications, addenda, and other Bidding Documents will be offered only through the designated link. Neither Owner nor Engineer will be responsible for Bidding Documents, including addenda, if any, obtained from sources other than the designated website.

The Engineer & Issuing Office for the Bidding Documents is: **Brian Newman, PE - Mattern & Craig brnewman@matternandcraig.com ; 231 16th Avenue NE, Hickory, NC 28601**

Full hard copy or partial sets of Bidding Documents will not be available from the Issuing Office. Neither Owner nor Engineer will be responsible for full or partial sets of Bidding Documents, including addenda, if any, obtained from sources other than the electronic (digital) documents available via web link from the Issuing Office. Bidders must be a licensed in the State of North Carolina.

Instructions to Bidders: For all further requirements regarding bid submittal, qualifications, procedures, and contract award, refer to the Instructions to Bidders that are included in the Bidding Documents.

City of Lenoir reserves the unqualified right to reject any and all proposals.

This Advertisement is issued by: **City of Lenoir: Jon Hogan – Public Works Director**

Copyright© 2018 National Society of Professional Engineers, American Council of Engineering Companies, and American Society of Civil Engineers. All rights reserved.

AGREEMENT BETWEEN OWNER AND CONTRACTOR FOR CONSTRUCTION CONTRACT (STIPULATED PRICE)

This Contract is by and between City of Lenoir, a North Carolina municipal corporation, (Owner) and _____, a North Carolina corporation, (Contractor) and is effective as of this the: ___day of _____ 2026 (the Effective Date).

Terms used in this Agreement have the meanings stated in the General Conditions and the Supplementary Conditions. Owner and Contractor hereby agree as follows:

ARTICLE 1—WORK

1.01 Work includes all labor, materials, equipment, services, and documentation necessary to construct the Project defined herein, all as required by the Contract Documents.

Contractor shall complete all Work as specified or indicated in the Contract Documents. The Work is generally described as follows:

1. Removal of existing concrete, Installation of precast or cast in place concrete foundation structures, clearing and grubbing of area which includes minor grading, relocation of 2 pull boxes, additionally form and pour new concrete for sidewalks.
2. Site of the Work includes property, easements, and designated work areas described in greater detail in the Contract Documents but generally located in within limits shown in exhibits.

ARTICLE 2—THE PROJECT

2.01 The Project, of which the Work under the Contract Documents is a part, is generally described as follows:

1. **Clock Tower –** which includes, but is not limited to, Removal of existing concrete, Installation of precast or cast in place concrete foundation structures, clearing and grubbing of area which includes minor grading, relocation of 2 pull boxes, additionally form and pour new concrete for sidewalks.

2.02 The Owner has retained **Mattern & Craig** ("Engineer") to act as Owner's representative, assume all duties and responsibilities of Engineer, and have the rights and authority assigned to Engineer in the Contract.

2.03 The part of the Project that pertains to the civil engineering Work has been designed by **Mattern & Craig (M&C)**.

ARTICLE 3—CONTRACT TIMES

3.01 *Time is of the Essence*

A. All time limits for Milestones, if any, Substantial Completion, and completion and readiness for final payment as stated in the Contract Documents are of the essence of the Contract.

**EJCDC® C-520, Agreement between Owner and Contractor for Construction Contract (Stipulated Price).
Copyright© 2018 National Society of Professional Engineers, American Council of Engineering Companies, and American Society of Civil Engineers. All rights reserved.**

3.02 *Contract Times: Days*

A. The Work will be substantially complete within **60 days** after the date when the Contract Times commence to run as provided in Paragraph 4.01 of the General Conditions, and completed and ready for final payment in accordance with Paragraph 15.06 of the General Conditions within **75 days** after the date when the Contract Times commence to run.

3.03 *Liquidated Damages*

A. Contractor and Owner recognize that time is of the essence as stated in Paragraph 4.01 above and that Owner will suffer financial and other losses if the Work is not completed and Milestones not achieved within the Contract Times, as duly modified. The parties also recognize the delays, expense, and difficulties involved in proving, in a legal or arbitration proceeding, the actual loss suffered by Owner if the Work is not completed on time. Accordingly, instead of requiring any such proof, Owner and Contractor agree that as liquidated damages for delay (but not as a penalty):

1. *Substantial Completion:* Contractor shall pay Owner **$250 for each day** that expires after the time (as duly adjusted pursuant to the Contract) specified above for Substantial Completion, until the Work is substantially complete.

B. If Owner recovers liquidated damages for a delay in completion by Contractor, then such liquidated damages are Owner's sole and exclusive remedy for such delay, and Owner is precluded from recovering any other damages, whether actual, direct, excess, or consequential, for such delay, except for special damages (if any) specified in this Agreement.

ARTICLE 4—CONTRACT PRICE

4.01 **OWNER SHALL PAY CONTRACTOR FOR COMPLETION OF THE WORK IN ACCORDANCE WITH THE CONTRACT DOCUMENTS, THE AMOUNTS THAT FOLLOW, SUBJECT TO ADJUSTMENT UNDER THE CONTRACT:**

A. For the following lump sum (stipulated) price(s)

Item No.	Description	Contract Amount
1	Mobilization @5%	$
2	Foundation and Sidewalks	$
3	Traffic Control	$
	Subtotal of this Lump Sum Amount	

B. For all Work other than Unit Price Work, a **Total Lump Sum Contract Amount** of **$[number]**.

All specific cash allowances are included in the above price in accordance with Paragraph 13.02 of the General Conditions.

Copyright© 2018 National Society of Professional Engineers, American Council of Engineering Companies, and American Society of Civil Engineers. All rights reserved.

C. For all Unit Price Work, an amount equal to the sum of the extended prices (established for each separately identified item of Unit Price Work by multiplying the unit price times the actual quantity of that item).

D. The extended prices for Unit Price Work set forth as of the Effective Date of the Contract are based on estimated quantities. As provided in Paragraph 13.03 of the General Conditions, estimated quantities are not guaranteed, and determinations of actual quantities and classifications are to be made by Engineer.

E. Total of Lump Sum Amount and Unit Price Work (subject to final Unit Price adjustment) **$[number]**.

F. For all Work, at the prices stated in Contractor's Bid, attached hereto as an exhibit.

ARTICLE 5—PAYMENT PROCEDURES

5.01 *Submittal and Processing of Payments*

A. Contractor shall submit Applications for Payment in accordance with Article 15 of the General Conditions. Applications for Payment will be processed by Engineer as provided in the General Conditions.

5.02 *Progress Payments; Retainage*

A. Owner shall make progress payments on the basis of Contractor's Applications for Payment on or about the **10th day of each month** during performance of the Work as provided in Paragraph 6.02.A.1 below, provided that such Applications for Payment have been submitted in a timely manner and otherwise meet the requirements of the Contract. All such payments will be measured by the Schedule of Values established as provided in the General Conditions (and in the case of Unit Price Work based on the number of units completed) or, in the event there is no Schedule of Values, as provided elsewhere in the Contract.

1. Prior to Substantial Completion, progress payments will be made in an amount equal to the percentage indicated below but, in each case, less the aggregate of payments previously made and less such amounts as Owner may withhold, including but not limited to liquidated damages, in accordance with the Contract.

a. **90 percent of the value of the Work completed** (with the balance being retainage).

1) If 50 percent or more of the Work has been completed, as determined by Engineer, and if the character and progress of the Work have been satisfactory to Owner and Engineer, then as long as the character and progress of the Work remain satisfactory to Owner and Engineer, there will be no additional retainage; and

b. **90 percent of cost of materials and equipment** not incorporated in the Work (with the balance being retainage).

B. Upon Substantial Completion, Owner shall pay an amount sufficient to increase total payments to Contractor to **[number]** percent of the Work completed, less such amounts set off by Owner pursuant to Paragraph 15.01.E of the General Conditions, and less **[number]** percent of Engineer's estimate of the value of Work to be completed or corrected as shown on the punch list of items to be completed or corrected prior to final payment.

Copyright© 2018 National Society of Professional Engineers, American Council of Engineering Companies, and American Society of Civil Engineers. All rights reserved.

5.03 *Final Payment*

A. Upon final completion and acceptance of the Work, Owner shall pay the remainder of the Contract Price in accordance with Paragraph 15.06 of the General Conditions.

5.04 *Consent of Surety*

A. Owner will not make final payment, or return or release retainage at Substantial Completion or any other time, unless Contractor submits written consent of the surety to such payment, return, or release.

5.05 *Interest*

A. All amounts not paid when due will bear interest at the rate of **[number]** percent per annum.

ARTICLE 6—CONTRACT DOCUMENTS

6.01 *Contents*

A. The Contract Documents consist of all of the following:

1. This Agreement.
2. Bonds:
    a. Performance bond (together with power of attorney).
    b. Payment bond (together with power of attorney).
3. General Conditions.
4. Supplementary Conditions.
5. Specifications as listed in the table of contents of the project manual (copy of list attached).
6. Drawings (not attached but incorporated by reference) consisting of **6** sheets with each sheet bearing the following general title: **Foundation and Grade**
7. Addenda (numbers **[number]** to **[number]**, inclusive).
8. Exhibits to this Agreement (enumerated as follows):
    a. **Foundation plan**
    b. **Demolition limits**
9. The following which may be delivered or issued on or after the Effective Date of the Contract and are not attached hereto:
    a. Notice to Proceed.
    b. Work Change Directives.
    c. Change Orders.
    d. Field Orders.
    e. Warranty Bond, if any.

B. The Contract Documents listed in Paragraph 6.01.A are attached to this Agreement (except as expressly noted otherwise above).

Copyright© 2018 National Society of Professional Engineers, American Council of Engineering Companies, and American Society of Civil Engineers. All rights reserved.

C. There are no Contract Documents other than those listed above in this Article 6.

D. The Contract Documents may only be amended, modified, or supplemented as provided in the Contract.

ARTICLE 7—REPRESENTATIONS, CERTIFICATIONS, AND STIPULATIONS

7.01 *Contractor's Representations*

A. In order to induce Owner to enter into this Contract, Contractor makes the following representations:

1. Contractor has examined and carefully studied the Contract Documents, including Addenda.

2. Contractor has visited the Site, conducted a thorough visual examination of the Site and adjacent areas, and become familiar with the general, local, and Site conditions that may affect cost, progress, and performance of the Work.

3. Contractor is familiar with all Laws and Regulations that may affect cost, progress, and performance of the Work.

4. Contractor has carefully studied the reports of explorations and tests of subsurface conditions at or adjacent to the Site and the drawings of physical conditions relating to existing surface or subsurface structures at the Site that have been identified in the Supplementary Conditions, with respect to the Technical Data in such reports and drawings.

5. Contractor has carefully studied the reports and drawings relating to Hazardous Environmental Conditions, if any, at or adjacent to the Site that have been identified in the Supplementary Conditions, with respect to Technical Data in such reports and drawings.

6. Contractor has considered the information known to Contractor itself; information commonly known to contractors doing business in the locality of the Site; information and observations obtained from visits to the Site; the Contract Documents; and the Technical Data identified in the Supplementary Conditions or by definition, with respect to the effect of such information, observations, and Technical Data on (a) the cost, progress, and performance of the Work; (b) the means, methods, techniques, sequences, and procedures of construction to be employed by Contractor; and (c) Contractor's safety precautions and programs.

7. Based on the information and observations referred to in the preceding paragraph, Contractor agrees that no further examinations, investigations, explorations, tests, studies, or data are necessary for the performance of the Work at the Contract Price, within the Contract Times, and in accordance with the other terms and conditions of the Contract.

8. Contractor is aware of the general nature of work to be performed by Owner and others at the Site that relates to the Work as indicated in the Contract Documents.

9. Contractor has given Engineer written notice of all conflicts, errors, ambiguities, or discrepancies that Contractor has discovered in the Contract Documents, and of discrepancies between Site conditions and the Contract Documents, and the written resolution thereof by Engineer is acceptable to Contractor.

Copyright© 2018 National Society of Professional Engineers, American Council of Engineering Companies, and American Society of Civil Engineers. All rights reserved.

10. The Contract Documents are generally sufficient to indicate and convey understanding of all terms and conditions for performance and furnishing of the Work.

11. Contractor's entry into this Contract constitutes an incontrovertible representation by Contractor that without exception all prices in the Agreement are premised upon performing and furnishing the Work required by the Contract Documents.

7.02 *Contractor's Certifications*

A. Contractor certifies that it has not engaged in corrupt, fraudulent, collusive, or coercive practices in competing for or in executing the Contract. For the purposes of this Paragraph 7.02:

1. "corrupt practice" means the offering, giving, receiving, or soliciting of anything of value likely to influence the action of a public official in the bidding process or in the Contract execution;

2. "fraudulent practice" means an intentional misrepresentation of facts made (a) to influence the bidding process or the execution of the Contract to the detriment of Owner, (b) to establish Bid or Contract prices at artificial non-competitive levels, or (c) to deprive Owner of the benefits of free and open competition;

3. "collusive practice" means a scheme or arrangement between two or more Bidders, with or without the knowledge of Owner, a purpose of which is to establish Bid prices at artificial, non-competitive levels; and

4. "coercive practice" means harming or threatening to harm, directly or indirectly, persons or their property to influence their participation in the bidding process or affect the execution of the Contract.

7.03 *Standard General Conditions*

A. Owner stipulates that if the General Conditions that are made a part of this Contract are EJCDC® C-700, Standard General Conditions for the Construction Contract (2018), published by the Engineers Joint Contract Documents Committee, and if Owner is the party that has furnished said General Conditions, then Owner has plainly shown all modifications to the standard wording of such published document to the Contractor, through a process such as highlighting or "track changes" (redline/strikeout), or in the Supplementary Conditions.

Copyright© 2018 National Society of Professional Engineers, American Council of Engineering Companies, and American Society of Civil Engineers. All rights reserved.

IN WITNESS WHEREOF, Owner and Contractor have signed this Agreement.

This Agreement will be effective on **[indicate date on which Contract becomes effective]** (which is the Effective Date of the Contract).

Owner: City of Lenoir	Contractor:
_____	_____
(typed or printed name of organization)	*(typed or printed name of organization)*
By: _____	By: _____
(individual's signature)	*(individual's signature)*
Date: _____	Date: _____
(date signed)	*(date signed)*
Name: Scott Hildebran	Name: _____
(typed or printed)	*(typed or printed)*
Title: _____	Title: _____
(typed or printed)	*(typed or printed)*
	*(If **[Type of Entity]** is a corporation, a partnership, or a joint venture, attach evidence of authority to sign.)*
Attest: _____	Attest: _____
(individual's signature)	*(individual's signature)*
Title: Jon Hogan	Title: _____
(typed or printed)	*(typed or printed)*
Address for giving notices:	Address for giving notices:
_____	_____
_____	_____
_____	_____
Designated Representative:	Designated Representative:
Name: _____	Name: _____
(typed or printed)	*(typed or printed)*
Title: _____	Title: _____
(typed or printed)	*(typed or printed)*
Address:	Address:
_____	_____
_____	_____
_____	_____
Phone: _____	Phone: _____
Email: _____	Email: _____
*(If **[Type of Entity]** is a corporation, attach evidence of authority to sign. If **[Type of Entity]** is a public body, attach evidence of authority to sign and resolution or other documents authorizing execution of this Agreement.)*	License No.: _____
	(where applicable)
	State: _____

EJCDC® C-520, Agreement between Owner and Contractor for Construction Contract (Stipulated Price).
Copyright© 2018 National Society of Professional Engineers, American Council of Engineering Companies, and American Society of Civil Engineers. All rights reserved.

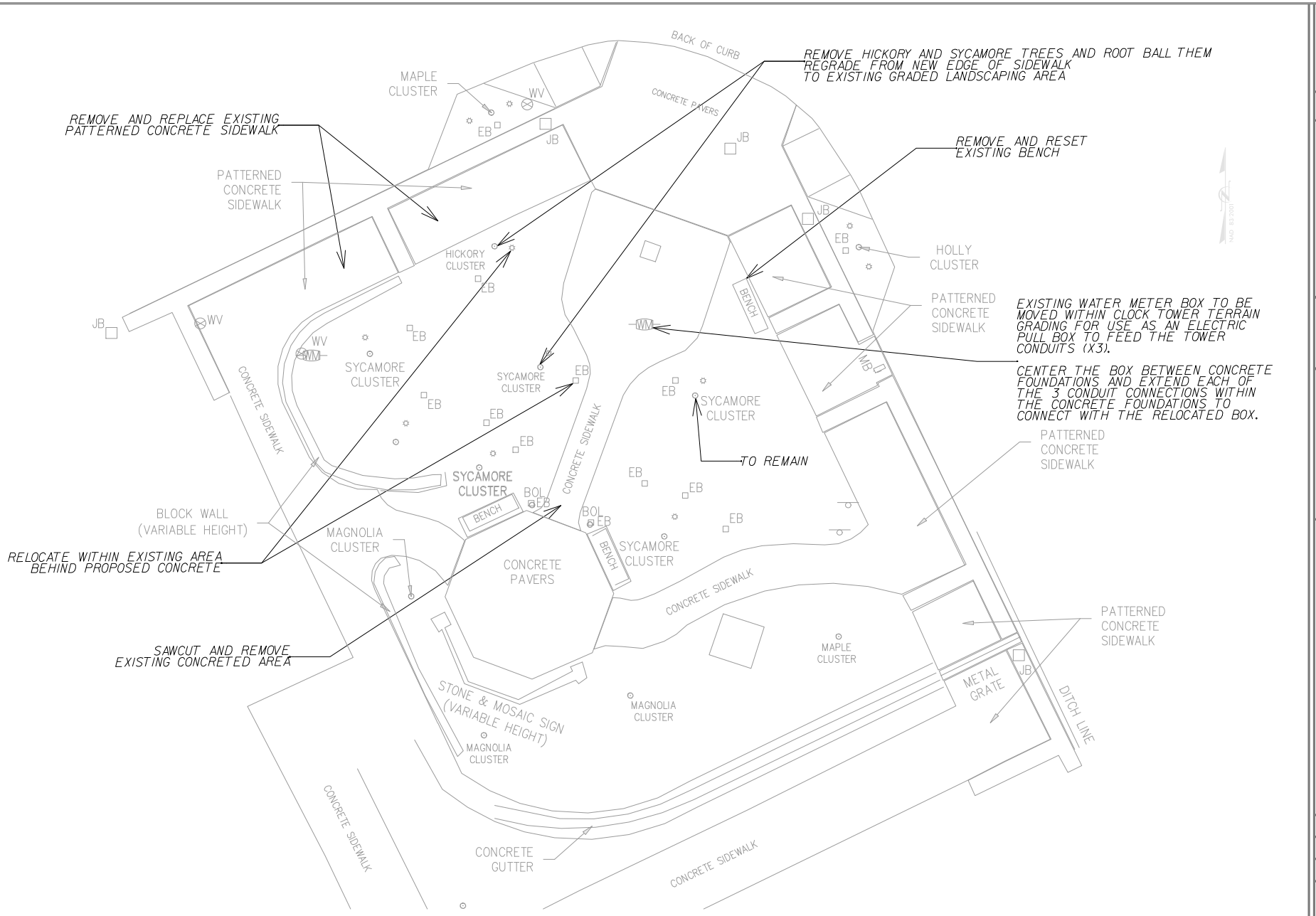

Issue Dates: 07/20/2026
Drawn By: EKW
Designed By: EKW
Checked By: BRN
Date: 07/20/26

Revisions

Mattern & Craig
ENGINEERS - SURVEYORS
231 19th AVENUE NE
HICKORY, NORTH CAROLINA 28601
(828) 855-1133
FAX (828) 855-1133

CITY OF LENOIR - CLOCK TOWER
EXISTING CONDITIONS DEMO AND SITE PREP PLAN
CITY OF LENOIR, NORTH CAROLINA

Vertical Scale: N/A
Horizontal Scale: 1" = 5'
Commission Number: 4322E
Sheet No.:
C-01

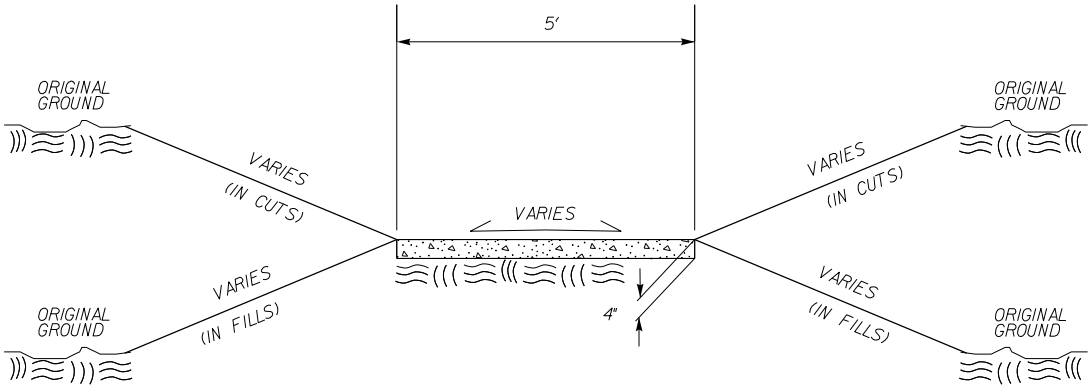

TYPICAL SECTION NO.1

NEW AND EXISTING SIDEWALK INSTALLATION

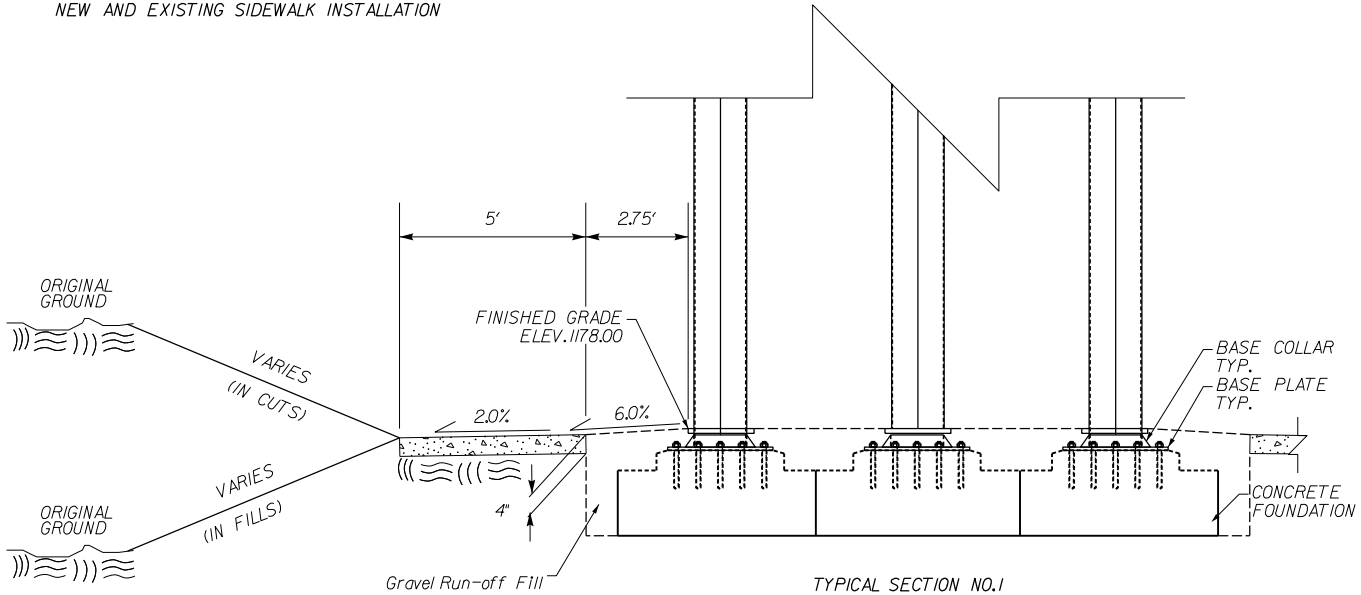

TYPICAL SECTION NO.1

CLOCK TOWER RUST RUN-OFF GRAVEL TRAP AND NEW SIDEWALK

Date

Revisions

Issue Date: 06/29/2026

Drawn By: EKW

Designed By: EKW

Checked By: BRN

Date: 06/29/26

Mattern & Craig
ENGINEERS - SURVEYORS
231 16th AVENUE NE
HICKORY, NORTH CAROLINA 28601
(828) 855-0131
FAX (828) 855-1133

CITY OF LENOIR - CLOCK TOWER

TYPICAL SECTIONS

CITY OF LENOIR, NORTH CAROLINA

Vertical Scale: AS NOTED

Horizontal Scale: AS NOTED

Commission Number: 4322E

Sheet No.: C-02

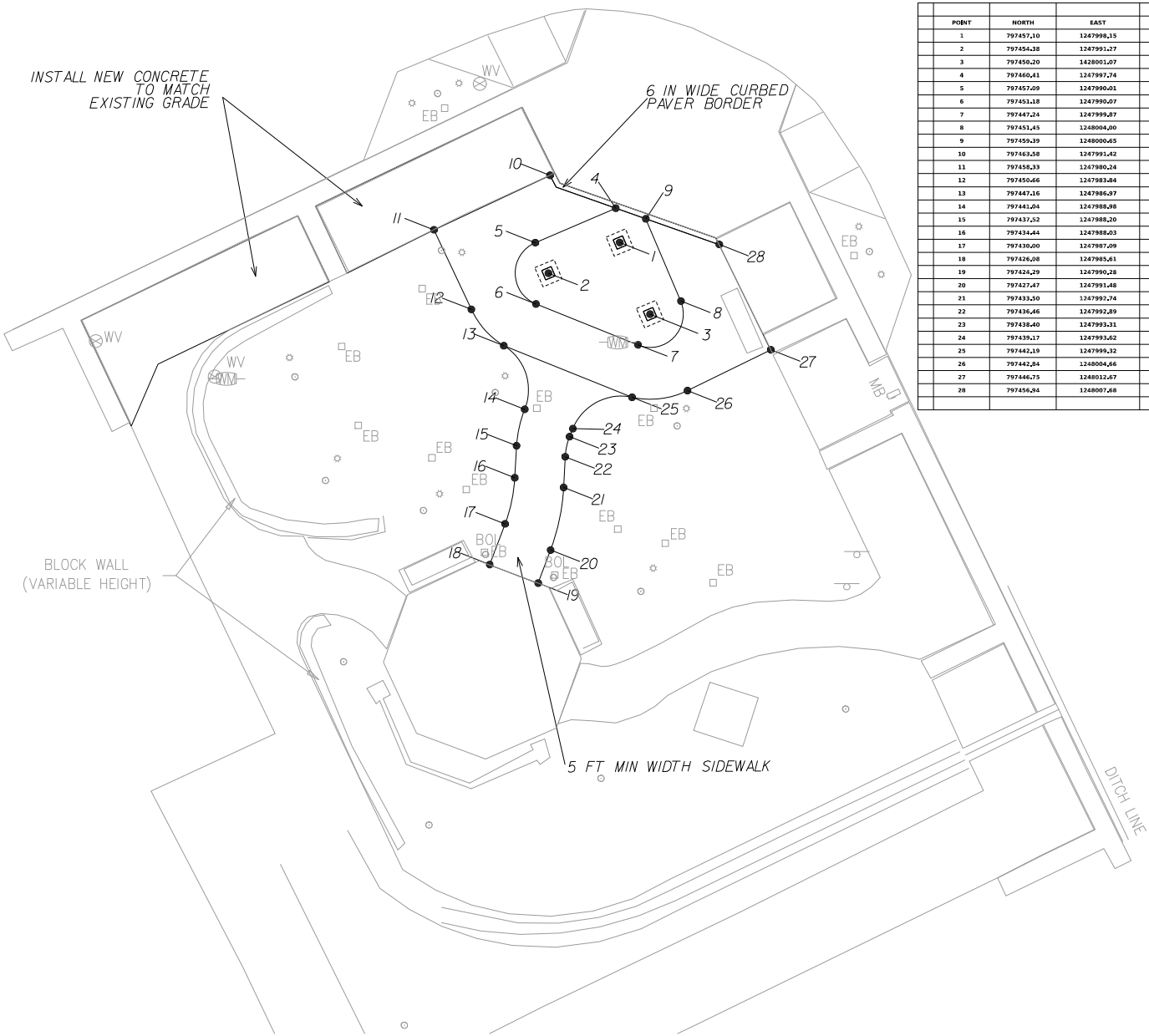

POINT	NORTH	EAST	ELEVATION	DESCRIPTION	RADIUS (FT)
1	797457.10	1247998.15	1178.00	Column 1 of 3	
2	797454.38	1247991.27	1178.00	Column 2 of 3	
3	797450.20	1428001.07	1178.00	Column 3 of 3	
4	797460.41	1247997.74	1177.64	Begin Median	
5	797457.09	1247990.01	1177.39	PC	3.2
6	797451.18	1247990.07	1177.25	PT	
7	797447.24	1247999.87	1177.11	PC	3.2
8	797451.45	1248004.00	1177.15	PT	
9	797459.39	1248000.65	1177.62	END MEDIAN	
10	797463.58	1247991.42	1177.61	BEGIN EDGE OF SIDEWALK_LT	
11	797458.33	1247980.24	1177.20		
12	797450.66	1247983.84	1177.18	PC	8.2
13	797447.16	1247986.97	1177.15	PCC	5
14	797441.04	1247988.98	1176.93	PCC	11
15	797437.52	1247988.20	1176.84	PT	
16	797434.44	1247988.03	1176.75	PC	15
17	797430.00	1247987.09	1176.62	PT	
18	797426.08	1247985.61	1176.68	END EDGE OF SIDEWALK_LT	
19	797424.29	1247990.28	1176.69	BEGIN EDGE OF SIDEWALK_RT	
20	797427.47	1247991.48	1176.62	PC	20
21	797433.50	1247992.74	1176.75	PT	
22	797436.46	1247992.89	1176.81	PC	6
23	797438.40	1247993.31	1176.84	PT	
24	797439.17	1247993.62	1176.86	PC	5
25	797442.19	1247999.32	1177.00	PCC	8.2
26	797442.84	1248004.66	1176.97	PT	
27	797446.75	1248012.67	1176.92		
28	797456.94	1248007.68	1177.40	END EDGE OF SIDEWALK_RT	

NOTE:

CONCRETE PAD AND SIDEWALK CROSS SLOPE SHALL NOT EXCEED 2.00% PER ADA.

Revisions

Date

Issue Dates: 07/20/2026

Drawn By: EKW

Designed By: EKW

Checked By: BRN

Date: 07/20/26

Mattern & Craig
ENGINEERS - SURVEYORS
231 19th AVENUE NE
HICKORY, NORTH CAROLINA 28601
(828) 855-2121
FAX (828) 855-1133

CITY OF LENOIR - CLOCK TOWER

LAYOUT AND GRADE PLAN

CITY OF LENOIR, NORTH CAROLINA

Vertical Scale: AS NOTED

Horizontal Scale: AS NOTED

Commission Number: 4322E

Sheet No.:

C-03

Docusign Envelope ID: 8785CF57-C343-58ED-61DD-3F697CA33B90

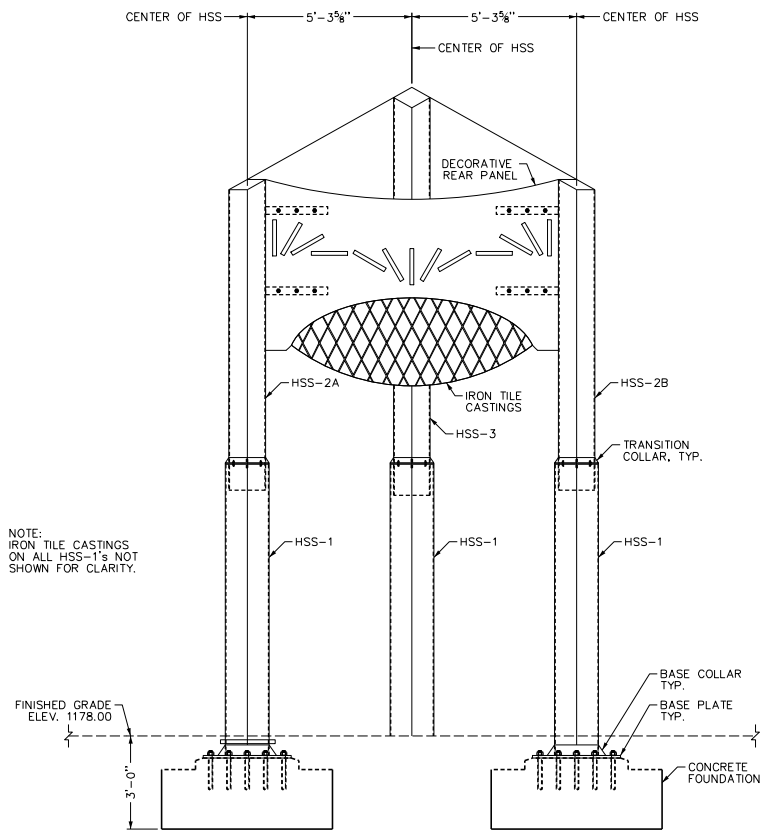

REAR ELEVATION VIEW

GENERAL NOTES

ALL MATERIALS AND CONSTRUCTION SHALL BE IN ACCORDANCE WITH THE NCDOT STANDARD SPECIFICATIONS FOR ROADS AND STRUCTURES, DATED JANUARY 2024.

ALL STRUCTURAL STEEL BARS AND PLATES SHALL BE CORTEN ASTM A588 WITH A MINIMUM YIELD STRENGTH OF 50 KSI.

ALL STRUCTURAL STEEL TUBES SHALL BE CORTEN ASTM A847 WITH A MINIMUM YIELD STRENGTH OF 50 KSI.

CONTRACTOR SHALL SATISFY ANY ADDITIONAL OSHA AND STATE SAFETY REQUIRMENTS.

ALL ELEVATIONS SHOWN IN FEET UNLESS NOTED OTHERWISE.

CONTRACTOR SHALL LOCATE ALL UTILITIES AND UTILITY ELEVATIONS PRIOR TO CONSTRUCTION. ALL UTILITIES TO REMAIN SHALL BE PROTECTED BY THE CONTRACTOR. ANY UTILITIES DAMAGED DURING CONSTRUCTION SHALL BE REPAIRED BY THE CONTRACTOR.

ALL CONCRETE SHALL BE CLASS A (f'c = 3,000 PSI).

All REINFORCING STEEL SHALL BE GRADE 60.

REINFORCING STEEL MAY BE SHIFTED SLIGHTLY AS NECESSARY TO CLEAR ANCHOR BOLTS.

ALL WELDING SHALL BE IN ACCORDANCE WITH CURRENT AWS SPECIFICATIONS PERFORMED BY A CERTIFIED WELDER.

E70XX ELECTRODES SHALL BE USED FOR ALL WELDING.

ANCHOR BOLTS SHALL BE HEADED 1" DIA. ASTM F1554 GR 36. ANCHOR BOLTS SHALL BE EMBEDDED A MINIMUM OF 12" INTO THE CONCRETE.

ALL FIELD CONNECTIONS TO BE 1" DIA. ASTM F3125 GRADE A325 BOLTS WITH CORRESPONDING NUTS AND WASHERS.

THERE SHALL BE CONDUITS CENTERED IN EACH TOWER LEG PEDESTAL. SEE SHEET S-3 FOR MORE DETAILS.

INDEX OF SHEETS

SHEET NO.	DESCRIPTION
S-1	REAR ELEVATION, GENERAL NOTES, AND INDEX OF SHEETS
S-2	STRUCTURE SIDE ELEVATIONS
S-3	FOUNDATION DETAILS

NORTH CAROLINA PROFESSIONAL ENGINEER SEAL 34955 TIMOTHY J. TOWNSEND

8/5/2026

Revisions

Date

Issue Date: 07/29/2026
Drawn By: EKW
Designed By: TJT
Checked By: TJT
Date: 07/29/26

Mattern & Craig
ENGINEERS - SURVEYORS
231 19th AVENUE NE
HICKORY, NORTH CAROLINA 28601
(828) 855-1133
FAX (828) 855-1133

CITY OF LENOIR - CLOCK TOWER

REAR ELEVATION, GENERAL NOTES AND INDEX OF SHEETS

CITY OF LENOIR, NORTH CAROLINA

Vertical Scale: 1/2" = 1'-0"
Horizontal Scale: 1/2" = 1'-0"
Commission Number: 4322E
Sheet No.: S-1

Docusign Envelope ID: 8785CF57-C343-58ED-61DD-3F697CA33B90

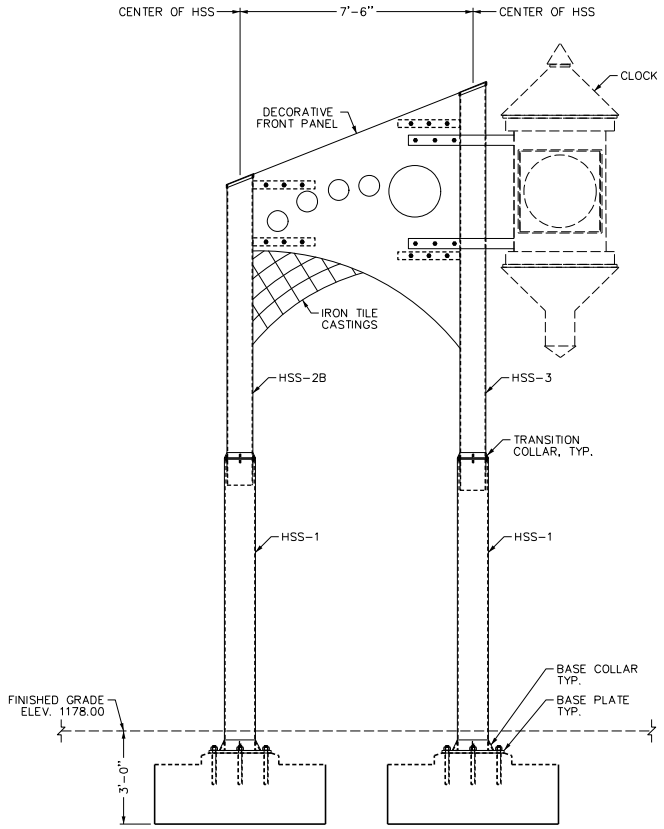

SIDE 2B VIEW

NOTE:
IRON TILE CASTINGS ON ALL HSS-1's NOT SHOWN FOR CLARITY.

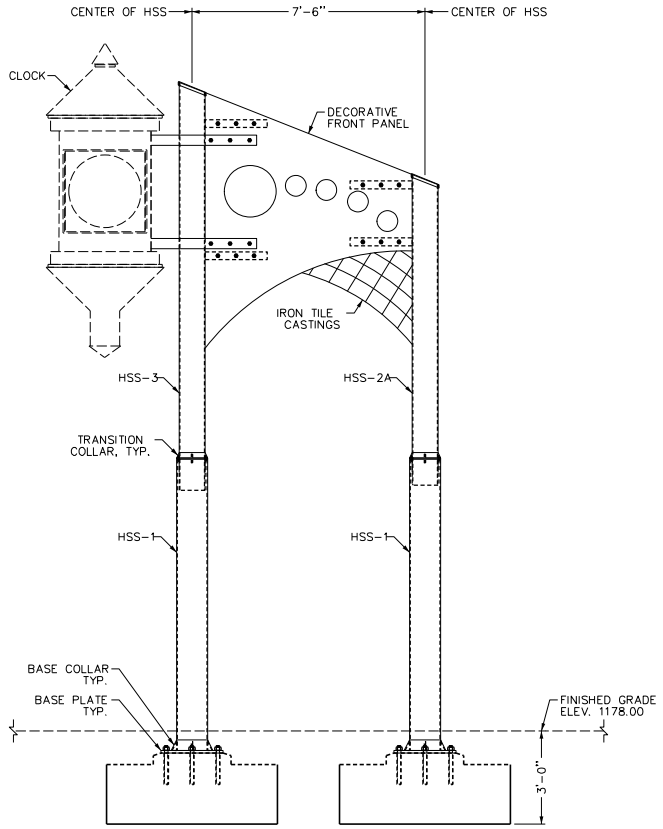

SIDE 2A VIEW

SIDE ELEVATION VIEWS

NORTH CAROLINA PROFESSIONAL ENGINEER SEAL 034955 TIMOTHY J. TOMMASINO
8/5/2026

Revisions	Date

Issue Date: 07/29/2026
Drawn By: EKW
Designed By: TJT
Checked By: TJT
Date: 07/29/26

Mattern & Craig
ENGINEERS - SURVEYORS
231 16th AVENUE NE
HICKORY, NORTH CAROLINA 28601
(828) 855-1133
FAX (828) 855-1133

CITY OF LENOIR - CLOCK TOWER

STRUCTURE SIDE ELEVATIONS

CITY OF LENOIR, NORTH CAROLINA

Vertical Scale: 1/2" = 1'-0"
Horizontal Scale: 1/2" = 1'-0"
Commission Number: 4322E
Sheet No.: S-2

Docusign Envelope ID: 8785CF57-C343-58ED-61DD-3F697CA33B90

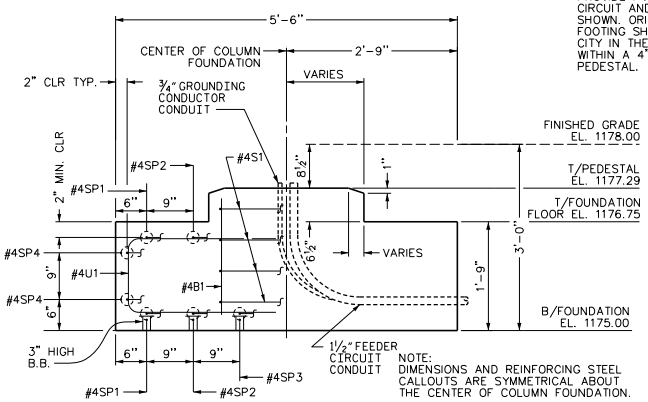

NOTE:
PROVIDE PVC CONDUIT FOR FEEDER CIRCUIT AND GROUNDING CIRCUIT AS SHOWN. ORIENTATION OF OUTLET OF FOOTING SHALL BE VERIFIED BY THE CITY IN THE FIELD. CONDUITS SHALL BE WITHIN A 4" CIRCLE CENTERED ON THE PEDESTAL.

NOTE:
DIMENSIONS AND REINFORCING STEEL CALLOUTS ARE SYMMETRICAL ABOUT THE CENTER OF COLUMN FOUNDATION.

TYP. COLUMN FOUNDATION SECTION

SCALE: 1" = 1'-0"

BAR TYPES

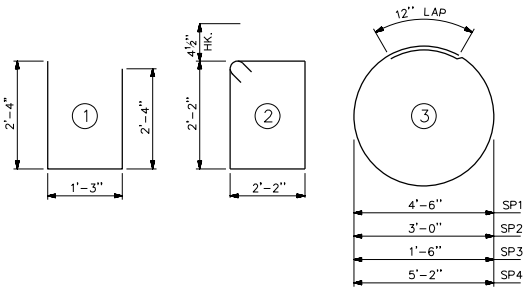

ALL BAR DIMENSIONS ARE OUT TO OUT.

BILL OF MATERIAL
FOR TOWER FOUNDATION

BAR	NO.	SIZE	TYPE	LENGTH	WEIGHT
B1	36	#4	STR	1'-11"	46
S1	12	#4	2	9'-5"	75
SP1	6	#4	3	15'-2"	60
SP2	6	#4	3	10'-6"	42
SP3	3	#4	3	5'-9"	12
SP4	6	#4	3	17'-3"	69
U1	48	#4	1	5'-11"	190

REINFORCING STEEL 493 LBS.

CLASS A CONCRETE 5.0 C.Y.

1" DIA. ANCHOR BOLTS NO. 24

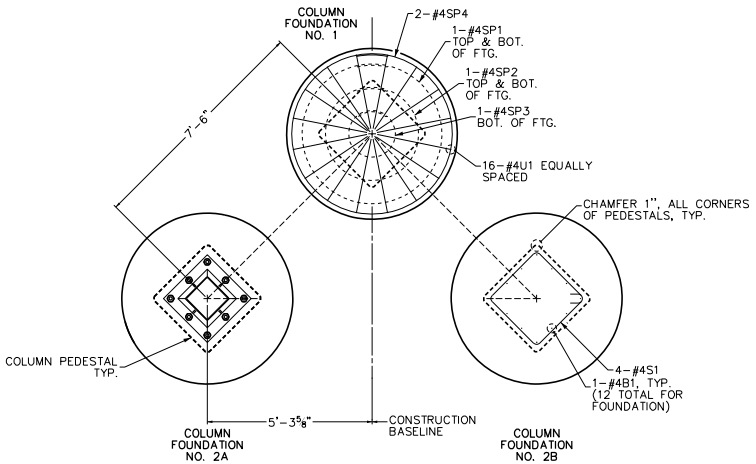

SUBSTRUCTURE PLAN 1

SCALE: ½" = 1'-0"

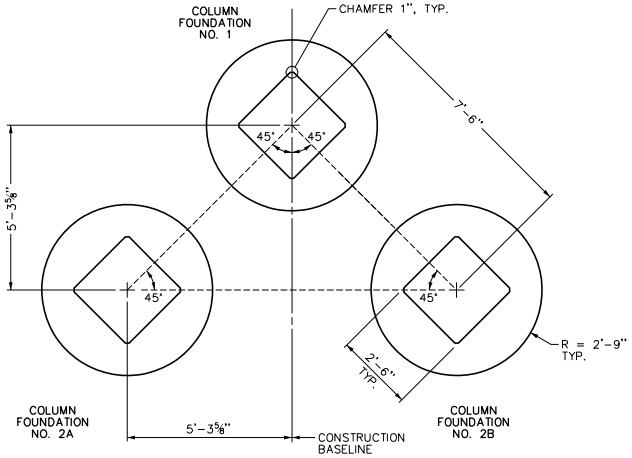

SUBSTRUCTURE LAYOUT

SCALE: ½" = 1'-0"

SHEET NOTES:

1. REINFORCING STEEL MAY BE SHIFTED SLIGHTLY TO AVOID CONFLICT WITH THE CONDUITS AND ANCHOR BOLTS.

2. ANCHOR BOLTS SHALL BE CAST INTO THE FOUNDATION. DRILLING AND ANCHORING OF ANCHOR BOLTS IS NOT ALLOWED. THE CONTRACTOR SHALL MAKE/OBTAIN A TEMPLATE OF THE ACTUAL ANCHOR BOLTS LOCATIONS BASED ON THE AS CONSTRUCTED TOWER BASE PLATES, TO LOCATE THE ANCHOR BOLTS.

3. DIMENSIONS AND REINFORCING STEEL IS SIMILAR FOR ALL FOUNDATION ELEMENTS.

NORTH CAROLINA PROFESSIONAL SEAL 34955 ENGINEER TIMOTHY J. TOMASSO
8/5/2026

Date

Revisions

Issue Date: 07/29/2026
Drawn By: EKW
Designed By: TJT
Checked By: TJT
Date: 07/29/26

Mattern & Craig
ENGINEERS - SURVEYORS
231 19th AVENUE NE
HICKORY, NORTH CAROLINA 28601
(828) 855-7133
FAX (828) 855-7133

CITY OF LENOIR - CLOCK TOWER
FOUNDATION DETAILS
CITY OF LENOIR, NORTH CAROLINA

Vertical Scale: AS NOTED
Horizontal Scale: AS NOTED
Commission Number: 4322E
Sheet No.: S-3

The City of Lenoir Public Works Department
Lenoir, North Carolina

Specifications and Rebid Documents

for

Clock Tower Foundation Project

Commission No. 4322E

Document Date: August 28, 2026

Bid Date: September 11, 2026 @ 10:00 AM

Mattern & Craig
Engineers – Surveyors
231 16th Ave NE
Hickory, NC 28601
Engineer: Brian Newman, PE
brnewman@matternandcraig.com
(828) 855-2233

Copyright© 2018 National Society of Professional Engineers, American Council of Engineering Companies, and American Society of Civil Engineers. All rights reserved.

Bid Form for Construction Contract

The terms used in this Bid with initial capital letters have the meanings stated in the Instructions to Bidders, the General Conditions, and the Supplementary Conditions.

ARTICLE 1—OWNER AND BIDDER

1.01 This Bid is submitted to:

Jon Hogan

Public Works Department

510-B Greer Cir SW

Lenoir, NC 28645

1.02 The undersigned Bidder proposes and agrees, if this Bid is accepted, to enter into an Agreement with Owner in the form included in the Bidding Documents to perform all Work as specified or indicated in the Bidding Documents for the prices and within the times indicated in this Bid and in accordance with the other terms and conditions of the Bidding Documents.

ARTICLE 2—ATTACHMENTS TO THIS BID

2.01 The following documents are submitted with and made a condition of this Bid:

A. Required Bid security

B. List of Proposed Subcontractors

C. List of Proposed Suppliers

D. Evidence of authority to do business in the state of the Project; or a written covenant to obtain such authority within the time for acceptance of Bids

E. Contractor's license number as evidence of Bidder's State Contractor's License or a covenant by Bidder to obtain said license within the time for acceptance of Bids

ARTICLE 3—BASIS OF BID—LUMP SUM BID AND UNIT PRICES

3.01 *Lump Sum Bids*

A. Bidder will complete the Work in accordance with the Contract Documents for the following lump sum (stipulated) price(s), together with any Unit Prices indicated in Paragraph 3.02:

1. Lump Sum Prices (Base Bid)

1	Mobilization @5%	LS	$ 4,600.00
2	Foundation and Sidewalks	LS	$ 82,287.00
5	Traffic Control	LS	$ 4,950.00
Total of All Lump Sum Bid Items			$ 91,837.00

Copyright© 2018 National Society of Professional Engineers, American Council of Engineering Companies, and American Society of Civil Engineers. All rights reserved.

3.02 Total Bid Price (Lump Sum)

Total Bid Price (Total of all Lump Sum Bids)	$ NINETY ONE THOUSAND
EIGHT HUNDRED THIRTY SEVEN DOLLARS	($ 91,837.00)
(Printed Words)	**(Numbers)**

ARTICLE 4—TIME OF COMPLETION

4.01 Bidder agrees that the Work will be substantially complete and will be completed and ready for final payment in accordance with Paragraph 15.06 of the General Conditions on or before the dates or within the number of calendar days indicated in the Agreement.

4.02 Bidder agrees that the Work will be substantially complete within **60** calendar days after the date when the Contract Times commence to run as provided in Paragraph 4.01 of the General Conditions, and will be completed and ready for final payment in accordance with Paragraph 15.06 of the General Conditions within **75** calendar days after the date when the Contract Times commence to run.

4.03 Bidder accepts the provisions of the Agreement as to liquidated damages.

ARTICLE 5—BIDDER'S ACKNOWLEDGEMENTS: ACCEPTANCE PERIOD, INSTRUCTIONS, AND RECEIPT OF ADDENDA

5.01 *Bid Acceptance Period*

A. This Bid will remain subject to acceptance for 60 days after the Bid opening, or for such longer period of time that Bidder may agree to in writing upon request of Owner.

5.02 *Instructions to Bidders*

A. Bidder accepts all of the terms and conditions of the Instructions to Bidders, including without limitation those dealing with the disposition of Bid security.

5.03 *Receipt of Addenda*

A. Bidder hereby acknowledges receipt of the following Addenda:

Addendum Number	Addendum Date
N/A	

ARTICLE 6—BIDDER'S REPRESENTATIONS AND CERTIFICATIONS

6.01 *Bidder's Representations*

A. In submitting this Bid, Bidder represents the following:

1. Bidder has examined and carefully studied the Bidding Documents, including Addenda.
2. Bidder has visited the Site, conducted a thorough visual examination of the Site and adjacent areas, and become familiar with the general, local, and Site conditions that may affect cost, progress, and performance of the Work.
3. Bidder is familiar with all Laws and Regulations that may affect cost, progress, and performance of the Work.

Copyright© 2018 National Society of Professional Engineers, American Council of Engineering Companies, and American Society of Civil Engineers. All rights reserved.

4. Bidder has carefully studied the reports of explorations and tests of subsurface conditions at or adjacent to the Site and the drawings of physical conditions relating to existing surface or subsurface structures at the Site that have been identified in the Supplementary Conditions, with respect to the Technical Data in such reports and drawings.

5. Bidder has carefully studied the reports and drawings relating to Hazardous Environmental Conditions, if any, at or adjacent to the Site that have been identified in the Supplementary Conditions, with respect to Technical Data in such reports and drawings.

6. Bidder has considered the information known to Bidder itself; information commonly known to contractors doing business in the locality of the Site; information and observations obtained from visits to the Site; the Bidding Documents; and the Technical Data identified in the Supplementary Conditions or by definition, with respect to the effect of such information, observations, and Technical Data on (a) the cost, progress, and performance of the Work; (b) the means, methods, techniques, sequences, and procedures of construction to be employed by Bidder, if selected as Contractor; and (c) Bidder's (Contractor's) safety precautions and programs.

7. Based on the information and observations referred to in the preceding paragraph, Bidder agrees that no further examinations, investigations, explorations, tests, studies, or data are necessary for the performance of the Work at the Contract Price, within the Contract Times, and in accordance with the other terms and conditions of the Contract.

8. Bidder is aware of the general nature of work to be performed by Owner and others at the Site that relates to the Work as indicated in the Bidding Documents.

9. Bidder has given Engineer written notice of all conflicts, errors, ambiguities, or discrepancies that Bidder has discovered in the Bidding Documents, and of discrepancies between Site conditions and the Contract Documents, and the written resolution thereof by Engineer is acceptable to Contractor.

10. The Bidding Documents are generally sufficient to indicate and convey understanding of all terms and conditions for performance and furnishing of the Work.

11. The submission of this Bid constitutes an incontrovertible representation by Bidder that without exception the Bid and all prices in the Bid are premised upon performing and furnishing the Work required by the Bidding Documents.

6.02 *Bidder's Certifications*

A. The Bidder certifies the following:

1. This Bid is genuine and not made in the interest of or on behalf of any undisclosed individual or entity and is not submitted in conformity with any collusive agreement or rules of any group, association, organization, or corporation.

2. Bidder has not directly or indirectly induced or solicited any other Bidder to submit a false or sham Bid.

3. Bidder has not solicited or induced any individual or entity to refrain from bidding.

4. Bidder has not engaged in corrupt, fraudulent, collusive, or coercive practices in competing for the Contract. For the purposes of this Paragraph 8.02.A:

a. Corrupt practice means the offering, giving, receiving, or soliciting of anything of value likely to influence the action of a public official in the bidding process.

Copyright© 2018 National Society of Professional Engineers, American Council of Engineering Companies, and American Society of Civil Engineers. All rights reserved.

b. Fraudulent practice means an intentional misrepresentation of facts made (a) to influence the bidding process to the detriment of Owner, (b) to establish bid prices at artificial non-competitive levels, or (c) to deprive Owner of the benefits of free and open competition.

c. Collusive practice means a scheme or arrangement between two or more Bidders, with or without the knowledge of Owner, a purpose of which is to establish bid prices at artificial, non-competitive levels.

d. Coercive practice means harming or threatening to harm, directly or indirectly, persons or their property to influence their participation in the bidding process or affect the execution of the Contract.

BIDDER hereby submits this Bid as set forth above:

Bidder:

G&M STRUCTURES LLC
(typed or printed name of organization)

By: Rodney L. Green
(individual's signature)

Name: Rodney Green
(typed or printed)

Title: Member Manager
(typed or printed)

Date: September 11, 2026
(typed or printed)

If Bidder is a corporation, a partnership, or a joint venture, attach evidence of authority to sign.

Attest: Kelly R. Ritchie
(individual's signature)

Name: Kelly Ritchie
(typed or printed)

Title:
(typed or printed)

Date: 9/11/2026
(typed or printed)

Address for giving notices:

EJCDC® C-410, Bid Form for Construction Contract.
Copyright© 2018 National Society of Professional Engineers, American Council of Engineering Companies, and American Society of Civil Engineers. All rights reserved.

BID BOND (PENAL SUM FORM)

Bidder	**Surety**
Name: G&M Structures, LLC Address *(principal place of business)*: 5270 NC Hwy 127 Taylorsville, NC 28381	Name: United Fire & Casualty Company Address *(principal place of business)*: P. O. Box 73909 Cedar Rapids, IA 52407-3909
Owner	**Bid**
Name: City of Lenoir Address *(principal place of business)*: 510-B Greer Circle SW Lenoir, NC 28645	Project *(name and location)*: Clock Tower Foundation Project, Commission No. 4322E, Lenoir, NC Bid Due Date: September 11, 2026

Bond

Penal Sum: Five Percent of Amount Bid (5% of Bid)

Date of Bond: September 11, 2026

Surety and Bidder, intending to be legally bound hereby, subject to the terms set forth in this Bid Bond, do each cause this Bid Bond to be duly executed by an authorized officer, agent, or representative.

Bidder	Surety
G&M Structures, LLC *(Full formal name of Bidder)*	United Fire & Casualty Company *(Full formal name of Surety) (corporate seal)*
By: Rodney Green *(Signature)*	By: Matthew Rose *(Signature) (Attach Power of Attorney)*
Name: Rodney Green *(Printed or typed)*	Name: Matthew Rose *(Printed or typed)*
Title: Member Manager	Title: Attorney-in-Fact
Attest: Kelly R. Ritchie *(Signature)*	Attest: T R T *(Signature)*
Name: Kelly Ritchie *(Printed or typed)*	Name: Tyler Turnbull *(Printed or typed)*
Title:	Title: Attorney-in-Fact

Notes: (1) Note: Addresses are to be used for giving any required notice. (2) Provide execution by any additional parties, such as joint venturers, if necessary.

EJCDC® C-430, Bid Bond (Penal Sum Form).
Copyright© 2018 National Society of Professional Engineers, American Council of Engineering Companies, and American Society of Civil Engineers. All rights reserved.

1. Bidder and Surety, jointly and severally, bind themselves, their heirs, executors, administrators, successors, and assigns to pay to Owner upon default of Bidder the penal sum set forth on the face of this Bond. Payment of the penal sum is the extent of Bidder's and Surety's liability. Recovery of such penal sum under the terms of this Bond will be Owner's sole and exclusive remedy upon default of Bidder.
2. Default of Bidder occurs upon the failure of Bidder to deliver within the time required by the Bidding Documents (or any extension thereof agreed to in writing by Owner) the executed Agreement required by the Bidding Documents and any performance and payment bonds required by the Bidding Documents.
3. This obligation will be null and void if:
   3.1. Owner accepts Bidder's Bid and Bidder delivers within the time required by the Bidding Documents (or any extension thereof agreed to in writing by Owner) the executed Agreement required by the Bidding Documents and any performance and payment bonds required by the Bidding Documents, or
   3.2. All Bids are rejected by Owner, or
   3.3. Owner fails to issue a Notice of Award to Bidder within the time specified in the Bidding Documents (or any extension thereof agreed to in writing by Bidder and, if applicable, consented to by Surety when required by Paragraph 5 hereof).
4. Payment under this Bond will be due and payable upon default of Bidder and within 30 calendar days after receipt by Bidder and Surety of written notice of default from Owner, which notice will be given with reasonable promptness, identifying this Bond and the Project and including a statement of the amount due.
5. Surety waives notice of any and all defenses based on or arising out of any time extension to issue Notice of Award agreed to in writing by Owner and Bidder, provided that the total time for issuing Notice of Award including extensions does not in the aggregate exceed 120 days from the Bid due date without Surety's written consent.
6. No suit or action will be commenced under this Bond prior to 30 calendar days after the notice of default required in Paragraph 4 above is received by Bidder and Surety, and in no case later than one year after the Bid due date.
7. Any suit or action under this Bond will be commenced only in a court of competent jurisdiction located in the state in which the Project is located.
8. Notices required hereunder must be in writing and sent to Bidder and Surety at their respective addresses shown on the face of this Bond. Such notices may be sent by personal delivery, commercial courier, or by United States Postal Service registered or certified mail, return receipt requested, postage pre-paid, and will be deemed to be effective upon receipt by the party concerned.
9. Surety shall cause to be attached to this Bond a current and effective Power of Attorney evidencing the authority of the officer, agent, or representative who executed this Bond on behalf of Surety to execute, seal, and deliver such Bond and bind the Surety thereby.
10. This Bond is intended to conform to all applicable statutory requirements. Any applicable requirement of any applicable statute that has been omitted from this Bond will be deemed to be included herein as if set forth at length. If any provision of this Bond conflicts with any applicable statute, then the provision of said statute governs and the remainder of this Bond that is not in conflict therewith continues in full force and effect.
11. The term "Bid" as used herein includes a Bid, offer, or proposal as applicable.

Copyright© 2018 National Society of Professional Engineers, American Council of Engineering Companies, and American Society of Civil Engineers. All rights reserved.

UNITED FIRE & CASUALTY COMPANY, CEDAR RAPIDS, IA
UNITED FIRE & INDEMNITY COMPANY, DALLAS, TX
FINANCIAL PACIFIC INSURANCE COMPANY, ROSEVILLE, CA

POWER OF ATTORNEY

To verify the authenticity of this Power of Attorney, please contact us at
UFG Insurance, 118 Second Ave SE, Cedar Rapids, IA 52401
telephone (800) 343-9130 or email *surety@unitedfiregroup.com*
THIS POWER OF ATTORNEY IS VOID IF ALTERED
To notify us of a claim, please contact us at *surety@unitedfiregroup.com*

KNOW ALL PERSONS BY THESE PRESENTS, that United Fire & Casualty Company, a corporation duly organized and existing under the laws of the State of Iowa; United Fire & Indemnity Company, a corporation duly organized and existing under the laws of the State of Texas; and Financial Pacific Insurance Company, a corporation duly organized and existing under the laws of the State of California (herein collectively called the Companies), and having their corporate headquarters in Cedar Rapids, State of Iowa, does make, constitute and appoint

TYLER TURNBULL, BEVERLY B. IVEY, DELLA B. CASE, MATTHEW ROSE, SCOTT PELIN, BRETT BRANTON, MICHELE MILLER, JIMMY SOUSA, LYDIA CASE, EACH INDIVIDUALLY

---

their true and lawful Attorney(s)-in-Fact with power and authority hereby conferred to sign, seal and execute in its behalf all lawful bonds, undertakings and other obligatory instruments of similar nature provided that no single obligation shall exceed $25,000,000.00 and to bind the Companies thereby as fully and to the same extent as if such instruments were signed by the duly authorized officers of the Companies and all of the acts of said Attorney, pursuant to the authority hereby given and hereby ratified and confirmed.

The Authority hereby granted by United Fire & Casualty Company, United Fire & Indemnity Company, and Financial Pacific Insurance Company shall expire as of the 21st day of March, 2027 unless sooner revoked. This Power of Attorney has been duly made, executed and delivered pursuant to, and in accordance with, the articles of incorporation, bylaws, and other governing documents of each of the respective Companies, and by the authority therein granted and under applicable corporate law. The signature of any officer authorized hereby, and the Corporate seal, may be affixed by facsimile to any power of attorney or certification of either authorized hereby; such signature and seal, when so used, being adopted by the Companies as the original signature of such officer and the original seal of the Companies, to be valid and binding upon the Companies with the same force and effect as though manually affixed.
IN WITNESS WHEREOF, the COMPANIES have each caused these presents to be signed by its officer and its corporate seal to be hereto affixed this 21st day of March, 2025.

By: _____
Kyanna M. Saylor, Vice President of
United Fire & Casualty Company
United Fire & Indemnity Company
Financial Pacific Insurance Company

State of Iowa, County of Linn, ss:
On this 21st day of March, 2025 before me personally came Kyanna M. Saylor to me known, who being by me duly sworn, did depose and say; that she is a Vice President of UNITED FIRE & CASUALTY COMPANY, a Vice President of UNITED FIRE & INDEMNITY COMPANY, and a Vice President of FINANCIAL PACIFIC INSURANCE COMPANY, the corporations described in and which executed the above instrument; that she knows the seal of said corporations; that the seals affixed to the said instrument are such corporate seals; that these seals were so affixed pursuant to authority given by the Boards of Directors of said corporations and that she signed her name thereto pursuant to like authority, and acknowledges same to be the act and deed of said corporations.

Judith A. Jones
Iowa Notarial Seal
Commission number 173041
My Commission Expires 04/23/2027

Notary Public: _____

My commission expires: 04/23/2027

I, Mary A. Bertsch, do hereby certify that I have compared the foregoing copy of the Power of Attorney and affidavit, and that the said Power of Attorney has not been revoked and is now in full force and effect.

In testimony whereof I have hereunto subscribed my name and affixed the corporate seal of each said Company this 11th day of September, 2026.

By: _____
Mary A. Bertsch, Assistant Secretary of
United Fire & Casualty Company
United Fire & Indemnity Company
Financial Pacific Insurance Company

BPOA0045 012026

Expiration Date

2026

License No.

107789

North Carolina

Licensing Board for General Contractors

This is to Certify That:

G&M STRUCTURES, LLC

Taylorsville, NC

is duly registered and entitled to practice

General Contracting

Limitation: Unlimited

Classification: Building

until

December 31, 2026

when this Certificate expires.

Witness our hands and seal of the Board.

Dated, Raleigh, N.C.

01/01/2026

This certificate may not be altered.

Chairman

Secretary-Treasurer

CITY MANAGER
SCOTT E. HILDEBRAN

CITY OF LENOIR
NORTH CAROLINA

MAYOR
JOSEPH L. GIBBONS

CITY COUNCIL
J. T. BEAL
R.C. DELLINGER
J. I. PERKINS
R. S. PRESTWOOD
K. R. ROGERS
D. F. STEVENS
C. D. THOMAS

RESOLUTION AUTHORIZING THE ACCEPTANCE OF A U.S. ENVIRONMENTAL PROTECTION AGENCY (EPA) BROWNFIELDS GRANT IN AN AMOUNT OF $500,000, AND AUTHORIZING EXECUTION OF ALL ASSOCIATED DOCUMENTS

WHEREAS, the United States Environmental Protection Agency (EPA) administers the Brownfields Program to provide funding to local governments to assess, safely clean up, and sustainably reuse brownfields properties; and

WHEREAS, the City of Lenoir previously submitted an application for an EPA Brownfields Cleanup Grant to fund environmental cleanup activities at 1429 College Avenue SW and Virginia Street, Lenoir, NC 29645 (Census Tract 37027030300), a 14.8-acre site that operated as a furniture manufacturing complex from the early 1900s to 2007; and

WHEREAS, the U.S. EPA has officially notified the City of Lenoir that it has been selected to receive a grant award in the amount of $500,000; and

WHEREAS, these grant funds will allow the City to conduct vital community outreach, site inventories, environmental site assessments, or remediation to promote public health and economic revitalization; and

WHEREAS, the acceptance of this grant requires the execution of an EPA Cooperative Agreement and adherence to federal pre-award and reporting guidelines; and

NOW, THEREFORE, BE IT RESOLVED BY THE CITY COUNCIL OF THE CITY OF LENOIR, THAT:

1. The City Council hereby formally accepts the U.S. EPA Brownfields Grant in the amount of $500,000, and
2. The City Manager, or his/her designee, is hereby authorized and directed to execute, and submit the EPA Cooperative Agreement, work plans, and all subsequent contracts, amendments, or progress reports required to implement the grant program.

This Resolution shall take effect immediately upon its passage and adoption, this the 15th day of September, 2026.

SEAL

Joseph L. Gibbons, Mayor

ATTEST:

Lauren Hartley, City Clerk

STATE OF NORTH CAROLINA COUNTY OF CALDWELL

AGREEMENT TO ACCEPT AND TREAT MUNICIPAL WASTEWATER TREATMENT FACILITY SLUDGE

THIS CONTRACT is made and entered into this 15th day of September, 2026 by and between the City of Lenoir, a North Carolina Municipal Corporation hereinafter referred to as "Lenoir" and the Town of Blowing Rock, a North Carolina Municipal Corporation hereinafter referred to as "Blowing Rock".

WITNESSETH

WHEREAS, Lenoir and Blowing Rock are political subdivisions of the State of North Carolina, both having the power and authority to enter into this agreement, and the signatories hereto have been authorized to execute this document on behalf of the Lenoir City Council and the Blowing Rock Town Council; and

WHEREAS, Lenoir currently owns and operates the Lower Creek Wastewater Treatment Facility (LCWWTF) and is engaged in the enterprise of managing, operating, and maintaining said facility and the biosolid residuals generated by such operation; and

WHEREAS, Blowing Rock owns and operates a wastewater treatment facility, and is also engaged in the enterprise of managing, operating, and maintaining the facility; and

WHEREAS, Lenoir and Blowing Rock mutually desire to enter into an agreement to provide for the acceptance and treatment of sludge generated by the Blowing Rock wastewater treatment facility in accordance with the terms and provisions contained herein; and

WHEREAS, Lenoir has determined that it has the capability to accept the wastewater treatment sludge throughout the term of this agreement without impairing the treatment capabilities of the Lower Creek Wastewater Treatment Facility; and

WHEREAS, Lenoir and Blowing Rock have or hold and will continue to have or hold throughout the term of this agreement, all appropriate permits necessary to effectuate their respective responsibilities under this agreement or will use their best efforts to obtain such permits;

NOW THEREFORE, in consideration of the mutual covenants, conditions and terms contained herein, the parties hereto, intending to be legally bound hereby, agree as follows:

1. This agreement will commence on the 15th day of September, 2026, and unless earlier terminated in accordance with the terms herein, will expire on the 30th day of June, 2035 (Hereinafter referred to as the "Wastewater Service Period").

2. Lenoir agrees to accept up to three (3) tanker loads (not to exceed 3,750 gallons per load) of sludge from the Blowing Rock Wastewater Treatment Facility per week (not to exceed 9,000 gallons per week) during the term of this agreement. Sludge received from Blowing Rock will be discharged directly into the discharge area that is pumped directly to the sludge holding tank.

3. Blowing Rock will not exceed the above gallons per tanker load (or 9,000 gallons per week) and a maximum of three (3) tanker loads per week provided for in Section 2 of this agreement, unless Lenoir expressly agrees in advance in writing that said maximum weekly loads and gallons per load may exceed the terms set forth for a specified period of time.

4. The wastewater sludge received from Blowing Rock must be in liquid form and must not have a concentration of more than 1.5% solids. The pH must not be less than 5.5 or greater than 8.0. These test results must be provided to the lab by Blowing Rock to Lenoir staff, daily, on all tanker loads.

5. To monitor sludge quality at the LCWWTF, Blowing Rock will fund and perform testing to evaluate the quality and constituents of the sludge being accepted at the LCWWTF. Depending on results of the testing, Blowing Rock will perform this testing at a minimum of annually or a maximum of quarterly. This testing is required and will be conducted in accordance with acceptable industry standards and the North Carolina Department of Environmental Quality (NCDEQ) guidelines for the following parameters:
   - TCLP (Toxicity Characteristics Leaching Procedure)
   - Arsenic, Cadmium, Chromium, Copper, Lead, Mercury, Nickel, Selenium, Silver, and Zinc
   - Cyanide
   - Total Phosphorus
   - Percent (%) Solids

   Within seven (7) days of receiving the results of these tests, the Town of Blowing Rock must email or mail a copy to the City of Lenoir Wastewater Treatment Facility Superintendent. Should Lenoir's permit limits change, Blowing Rock will immediately adjust testing accordingly.

6. Blowing Rock will timely pay Lenoir for the gallons of treated sludge on a monthly basis, in accordance with invoices, or by purchase of coupons from Lenoir for septic waste haulers, which will be based upon the capacity of the tanker or the actual gallons disposed of at the LCWWTF. Blowing Rock will pay Lenoir the amounts of each such monthly invoice within 30 calendar days of the date of each invoice.

7. The initial per gallon rate to be charged to Blowing Rock for the acceptance of

wastewater treatment sludge shall be 20 cents per gallon.

Over the term of this agreement or any extension thereof, Lenoir may, at its sole discretion, increase the initial per gallon rate as it deems necessary. Lenoir will not increase said rates to Blowing Rock more than one time during any fiscal year of twelve (12) months ending on June 30 of each year. Lenoir agrees to notify Blowing Rock in writing of planned increases in rates at least ninety (90) days prior to June 30 of any fiscal year, with rate increases that are to become effective on July 1 of that same year.

8. Blowing Rock will provide a minimum of three months advance written notice to Lenoir prior to the expiration of this agreement or subsequent extensions of this agreement if Blowing Rock desires to extend the terms of this agreement. Upon timely receipt of such notice of Blowing Rock's desire to extend this agreement, Lenoir will, within sixty (60) days after having received such notification, notify Blowing Rock in writing of its acceptance of the extension of this agreement.

9. In the event that Lenoir elects not to extend this agreement, Lenoir will continue to accept and provide sludge treatment to Blowing Rock, under the same terms of the agreement, until Blowing Rock has had sufficient opportunity to secure an alternate source(s) of sludge disposal and treatment; however, Lenoir will not be bound to continue to provide sludge acceptance and treatment to Blowing Rock beyond a period of twelve (12) months past the date of its written notification to Blowing Rock of its intention not to extend this agreement.

10. In the event of damage or destruction of Lenoir's LCWWTF or any emergency which, in the reasonable judgment of Lenoir, is likely to result in material loss or damage to the system or constitute a material threat to human health or safety, Lenoir may suspend operation of its wastewater treatment facility. Lenoir's response to emergencies and other such unusual circumstances will be in accordance with applicable policies, regulations, laws and requirements and with such personnel and equipment as necessary to maintain or restore the operations of its wastewater treatment facility in a timely manner with the least possible disruption or inconvenience.

11. Lenoir and Blowing Rock both represent that no litigation is pending or threatened against them which would impair their ability to perform their respective duties and obligations under the terms, covenants and provisions of this agreement.

12. Resolution of Disputes

Should any disputes arise under this agreement, including but not limited to disputes pertaining to services, rates, or invoices, said disputes will be resolved, when possible, through good faith negotiations between the parties. It is the intent of Lenoir and Blowing Rock that pursuit of legal action will be a remedy of last resort and that a negotiated resolution, including the use of outside experts or mediators, will be the preferred means of resolving disputes

hereunder.

13. Default and Termination

This agreement may be terminated prior to its stated expiration date by Lenoir or Blowing Rock in accordance with the terms and conditions set forth below.

A. Termination for cause by Lenoir. Upon the happening of any of the following events of default by Blowing Rock, Lenoir will have the right to terminate this agreement:

The failure of Blowing Rock to perform or observe any of its material covenants, agreements, obligations and/or duties created by this agreement including but not limited to paragraph 6 hereof.

B. Termination for cause by Blowing Rock. Upon the happening of any of the following events of default by Lenoir, Blowing Rock will have the right to terminate this agreement:

The failure of Lenoir to perform or observe any of its material covenants, agreements, obligations and/or duties created by this agreement.

14. **NOTICES:** To effectuate service of all notices required under this agreement, notices must be served by Certified United States Mail, Postage Prepaid, Return Receipt Requested, Addressed to the Party to whom directed at the address herein set forth or at such other address as may from time to time be designated in writing by either party:

To Lenoir:	**To Blowing Rock:**
City of Lenoir Wastewater Treatment Superintendent 1905 Broadland Rd, Lenoir, NC 28645	Town of Blowing Rock _____ _____

15. This agreement embodies the entire agreement between the parties in connection with this transaction, and there are no oral or parol agreements, representations or inducements existing between the parties relating to this transaction, which are not expressly set forth herein. This agreement may not be modified except by a written agreement signed by all parties to this agreement. Neither party may sell, convey or otherwise alienate the rights and obligations created herein without the prior written permission of the other party to this agreement. This agreement is non-assignable.

16. Nothing contained herein is to be construed to place the parties in the relationship of partners or joint ventures, and neither party has the power to obligate or bind the other party in any manner whatsoever. No joint agency is established by this Agreement pursuant to Article 20, Part 1 of Chapter 160A of the North Carolina General Statutes, by other similar statutory authority authorizing interlocal cooperation between units of local government, or

otherwise.

17. No written waiver by any party to this agreement at any time of any breach of any other provision of this agreement will be deemed a waiver of a breach of any provision herein or consent to any subsequent breach of the same or any other provision.

18. The captions and article numbers appearing in this agreement are inserted only as a matter of convenience and do not define, limit, construe or describe the scope of such paragraphs or articles of this agreement or in any way affect this agreement.

19. This agreement is governed by and interpreted in accordance with the laws of the State of North Carolina.

20. Words of any gender used in this agreement include any other gender, and words in the singular number include the plural, when the sense requires.

21. This agreement may be executed in any number of counterparts, each of which when so executed and delivered will be deemed an original, and it will not be necessary in making proof of this agreement to produce or account for more than one such fully executed counterpart.

22. Except as provided herein, the rights and remedies provided for in this agreement are cumulative and are not exclusive of any rights or remedies that any party may otherwise have at law or in equity.

IN WITNESS WHEREOF, the parties have executed this agreement on the day and year first above written.

CITY OF LENOIR, NORTH CAROLINA

By: _____
Joseph L. Gibbons, Mayor

(SEAL)
Attest:

By: _____
Lauren Hartley, City Clerk

TOWN OF BLOWING ROCK, NORTH CAROLINA

By: _____
_____, Mayor

(SEAL)
Attest:

By: _____
_____, Town Clerk

This agreement has been pre-audited in the manner required by the Local Government Budget and Fiscal Control Act.

By: Donna Bean
Donna Bean, Finance Director
City of Lenoir, North Carolina

by: _____
_____, Finance Director
Town of Blowing Rock, North Carolina

FY 2025 CAPER SUMMARY

The City of Lenoir receives both Community Development Block Grant (CDBG) Program and HOME Program funding from the U.S. Department of Housing and Urban Development (HUD). One requirement of HUD is the City must complete a Consolidated Annual Performance and Evaluation Report, better known to us as the CAPER. The purpose of the CAPER is to provide an overall evaluation of federally-funded activities and accomplishments to HUD and the community. The performance report is prepared to allow for public review and comment.

The City of Lenoir, North Carolina received $984,230.65 in HOME Program funds from HUD in FY 2025. The City also received an additional $445,772.68 in generated HOME Program Income. The City serves as the lead entity of a 28 local government Unifour HOME Consortium. The City, as Lead Entity of the HOME Consortium, has assisted 34 applicants become homebuyers through its homebuyer assistance program during this reporting period. The City funded 2 different Community Housing Development Organizations (CHDOs) which resulted in the construction of 4 new Habitat homes during this reporting period. The City also funded 2 Multi-Family Apartment Projects which created 126 rental apartment units.

The City of Lenoir, North Carolina received $136,612 in CDBG funds. The City is in the process of using CDBG funding for public facilities improvements at the Old Lenoir High School Campus Complex which is located in low income census tracts.

ATTENTION RESIDENTS OF CITY OF LENOIR

Notice is hereby given that the City of Lenoir and the Unifour HOME Consortium will hold a public hearing to receive public input and comments concerning the proposed FY-2025 Consolidated Annual Performance and Evaluation Report. This report details the activities and expenditures of Community Development Block Grant and HOME funds during the period July 1, 2025 through June 30, 2026.

The public meeting will be Tuesday, September 15, 2026 at 6:00pm, before the Lenoir City Council in the City/County Chambers on the bottom floor of the Caldwell County Office building located at 905 West Avenue, Lenoir, NC.

There will be a 15-day minimum comment period beginning August 29, 2026 and ending September 15, 2026 to obtain citizen input before the report submittal to the US Dept. of HUD.

This meeting is open to the public. Any person with a disability needing special accommodations or non-English speaking persons needing translation services should contact the City of Lenoir at least 48 hours prior to the meeting. For copies of the report or for more information, contact Rick Oxford at the Western Piedmont Council of Governments at (828) 322-9191 extension 245, or 1-(800) 735-2962 TDD.
PUBLISH: August 29, 2026

****

Publish one time only on: August 29, 2026
Non-legal block ad needs to be in body of paper not classified section
Run one time only
Use HUD logos
AFFIDAVIT REQUIRED

Bill & **Affidavit** to: Rick Oxford
WPCOG for **(City of Lenoir CAPER AD)**
P. O. Box 9026
Hickory, NC 28603

Contact: Rick Oxford at (828) 514-9191 for additional information.

.

ATTENTION RESIDENTS OF CITY OF LENOIR

Notice is hereby given that the City of Lenoir and the Unifour HOME Consortium will hold a public hearing to receive public input and comments concerning the proposed FY-2025 Consolidated Annual Performance and Evaluation Report. This report details the activities and expenditures of Community Development Block Grant and HOME funds during the period July 1, 2025 through June 30, 2026.

The public meeting will be Tuesday, September 15, 2026 at 6:00pm, before the Lenoir City Council in the City/County Chambers on the bottom floor of the Caldwell County Office building located at 905 West Avenue, Lenoir, NC.

There will be a 15-day minimum comment period beginning August 29, 2026 and ending September 15, 2026 to obtain citizen input before the report submittal to the US Dept. of HUD.

This meeting is open to the public. Any person with a disability needing special accommodations or non-English speaking persons needing translation services should contact the City of Lenoir at least 48 hours prior to the meeting. For copies of the report or for more information, contact Rick Oxford at the Western Piedmont Council of Governments at (828) 322-9191 extension 245, or 1-(800) 735-2962 TDD.

8/29/26

EQUAL HOUSING OPPORTUNITY

Committee of the Whole
Meeting Minutes
Tuesday, September 22, 2026
8:30 AM

Present: Mayor Joe Gibbons, Mayor Pro-Tem Ike Perkins, Councilmembers present were Jonathan Beal, Ralph Prestwood, Kimmie Rogers, Crissy Thomas, David Stevens, and City Manager Scott Hildebran

City Staff: In attendance was Public Services Public Works Director Jon Hogan, Police Chief Andy Wilson, Planning Director Hannah Williams, City Parks & Recreation Director Phil Harper, Planning Technician Kim Staines, Assistant Fire Chief Tyrone Sturgis, Budget, Procurement & Financial Analyst Josh Angle, Public Services Public Utilities Director Jeff Church, and Community Engagement Coordinator Ashley Smith.

Absent Councilmember Rebecca Dellinger, Finance Director Donna Bean, Communication & Public Information Director Joshua Harris, Fire Chief Norman Staines, Economic Development Main Street Director Brenda Floyd, and Director of Special Projects and Grants David Coffey.

I. Call to Order

Mayor Pro-Tem Ike Perkins welcomed everyone and called the meeting to order.

II. Citizen Comment

There were no citizen comments presented at this time.

III. Public Safety

A. Police Chief Andy Wilson gave the following update:

- The Communication Merger is going well.
- There are several employee candidates from the BLET class at Caldwell Community College and Technical Institute.
- The Caldwell County Fair will be held September 23–27, with officers on duty.
- National Night Out will be held October 6 from 6:00 p.m. to 9:00 p.m.
- New all-wheel drive SUVs are currently being outfitted with stripes and are expected to be in service within a few weeks.

B. Assistant Fire Chief Tyrone Sturgis gave the following update:

- The completion date for the new ladder truck is October 20. Staff will travel to the Pierce Plant in Appleton, Wisconsin to conduct a final inspection prior to the truck being delivered to Lenoir.
- Staff are working on the annual inspection of all hydrants within the city. This should be completed by the end of September. Once completed, staff will start conducting annual testing of hydrants.

- October is Fire Prevention month.
- Staff will participate in facilities training at Catawba Valley Community College (CVCC) on October 14-16. This will finish the 18 hours of facilities training for all staff this year.
- The fire department is hosting a Fire Officer I, Fire Officer II, Fire Inspector I, and Technical Rescuer Ropes certification course over the next few months.

IV. Public Services

A. Public Services Public Works Director Jon Hogan gave the following update:

- Lenoir Fire Department Infrastructure: Design/Build Request for Qualifications (RFQ) meeting was held. GeoSpecialties plans to begin work, with a three-phase process: micro-pile installation to secure footing, pipe patching, and pressure grouting. The contract is to be completed within 90 days.
- Hospital Avenue Sidewalk Project: Neill Grading has a crew building curb and gutter and pouring the sidewalk at the Harper end. Retaining Wall #1 is complete and retaining wall #2 is under construction.
- Phase II Gateway Project: Sign installation was delayed until October due to material delivery. Encroachment revisions to three of the signs (South, East and West) are complete and are working on the northern location. They plan to pour concrete and set final signs November 19–24, 2026.
- Veterans Plaza Project: The project is 90% complete. We are still waiting for the delivery of planters and the additional monument and plaque to add future names.
- Clock Tower: The Notice of Award was sent to G&M Structures LLC, and will issue the Notice to Proceed. The overall goal is to have the tower installed by mid-November.
- Steel Street Stormwater: McGill is working on a site survey, then the design and scope will begin.
- Triangle Park: Demo will start within the next week.
- Greenway Links:
    - Harper/West Ave. realignment and Greenway: Mattern & Craig Engineers has 100% construction plans for the connector, which we are currently reviewing. The goal is to have this out to bid within the next month.
    - BL-0065/Morganton Blvd. connector at Harper Ave: Solicitation for Request for Letters of Interest (RFLOI) for PE/Design opened on September 21 and are due by Friday, October 9, 2026.
    - NC-18 Crossing:The City will revisit and reevaluate the Hawk Signal option.

B. Public Services Public Utilities Director Jeff Church gave the following update:

- Lenoir–Valdese Water Interconnect: A joint progress meeting with Lenoir

and Valdese staff was held on August 12 to review the project and key design decisions. The water application was submitted to Public Water Supply for review, followed by the Duke line crossing application. Plans and applications are being updated for submittals to NCDOT for the encroachment agreement and to DEQ for the erosion and sediment control approval. Easement plats are being prepared and submitted to Colliers for easement acquisition.

- Lower Creek WWTP Process Basin Upgrades: Project costs (*current funding received is $5.6 million*) will be significantly higher, as discussed at the September 10 progress meeting, since the basins will need expanded aeration capacity. As design progresses towards 60%, efforts will be made to identify potential cost reductions for the project.
- Arc Flash Assessments: Reports will be finalized once Duke Energy provides the remaining information. Labels will be printed and then applied to the electrical gear.
- Water and Sewer AIAs: The Asset Management Plans for both the Water and Sewer AIA projects are being prepared. The plan is to present the AMPs at the Committee of the Whole meeting in late October.
- Finley Area Water Improvements: Painting of the elevated water tank is underway. Water line construction continues in the project area, with installation completed along Finley to Main Street.
- East Harper Sewer Replacement: The Contractor is working to provide as-built elevations and to repair items in the area.

1. Approval Change Order Number One, Finley Area Water System Improvements; This change order results in an increase of the original contract amount, $2,063,700, by $22,224.18, resulting in a final contract price of $2,091.924.18. Project contingency funds will be used to cover the increase. Staff recommends approval of the change order, as submitted.

A copy of the change order is attached to the minutes.

Public Services Public Utilities Director Jeff Church explained the need for the change order. Councilmembers agreed and had no concerns.

Upon a motion by Councilmember Beal, City Council voted 6 to 0 to approve the Change Order Number One, Finley Area Water System Improvements, as presented.

V. Community Development

A. Community Engagement Coordinator Ashley Smith gave the following update:

- The Main Street America assessment will begin soon.
- The Downtown Lenoir Development Alliance (DLDA) will hold education sessions for downtown businesses to help with websites in October.

- The second round of mural boxes downtown has been completed.
- The holiday decor has been ordered.
- Downtown music services have transitioned from Spectrio to Pandora for better performance.
- Promotional updates include filming by Roseland Pictures and still image sessions for Visit Lenoir.
- Bloom Blast will be held on Saturday, October 3.

B. Planning Director Hannah Williams gave the following report and update:

- The September Planning Board meeting did not have any cases. The board reviewed the new state laws limiting local zoning authority regarding minimum parking counts and home-based businesses.
- There is one Planning Board seat vacancy, with an application under review.
- The site plan for Dutch Brothers is under review.
- A new healthcare facility (Senior TLC) is moving into the former Bargain Hunt space, which includes improved pedestrian connectivity.
- There are currently no applications submitted for the October Planning Board meeting, it may be canceled.

C. Parks & Recreation Director Phil Harper gave the following update:

- A sign dedication was held for Rick Pierce, a longtime member of the Parks & Recreation Advisory Board.
- Registration is open for basketball, cheer, adult softball, and tennis lessons through early October.
- The outdoor pool is now closed and the indoor pool and plunge pool are open.
- LED lighting upgrades have been completed at the Martin Luther King Jr. Center and Mulberry Recreation facilities.
- The Aquatic Fitness Center will have new exercise equipment soon.
- The Parks & Recreation Advisory Board will meet on Monday, October 19 at the Martin Luther King Jr. Center.

VI. Finance & Administration

A. Finance Director Donna Bean was not present, City Manager Scott Hildebran gave a update.

1. Financial Summary:The General Fund was within budget and progressing as expected. A copy of the financial summary is attached to these minutes as information.

City Manager Scott Hildebran introduced new employee Josh Angle. Josh will be the new Budget Procurement & Financial Analyst.

B. Director of Special Projects and Grants David Coffey was not present to give an update.

VII. Other

A. The calendar for the month of October was provided in the packet as information.

VIII. Adjournment

There being no further business, the meeting was adjourned at 9:28 a.m.

Change Order No. 001

Date of Issuance: 09/15/2026 Effective Date: 09/15/2026

Project: Finley Area Water System Improvements	Owner: City of Lenoir	Owner's Contract No.: DWI No. SRP-D-ARP-0198
Contract: Finley Area Water System Improvements		Date of Contract: 08/29/2025
Contractor: Caldwell Tanks, Inc.		Engineer's Project No.: 21.01145

The Contract Documents are modified as follows upon execution of this Change Order:

Description: Undercut and replacement of poor soils encountered during the excavation for the tank foundation. To meet the design soil bearing the foundation had to be undercut 3 FT at the direction of the Geo-Technical Engineer, BLE and then replaced with flowable fill concrete.

Attachments (list documents supporting change):
Summary of change order items: Contractor's Cost Proposal per Engineer's markups.

CHANGE IN CONTRACT PRICE:	CHANGE IN CONTRACT TIMES:
Original Contract Price: $2,063,700.00	Original Contract Times: ☐ Working ☒ Calendar days Substantial completion (days or ~~date~~): 360 Ready for final payment (days or ~~date~~): 390
[~~Increase~~] [~~Decrease~~] from previously approved Change Orders No. 0 to No. 0: $0.00	[~~Increase~~] [~~Decrease~~] from previously approved Change Orders No. 0 to No. 0: Substantial completion (days): 0 Ready for final payment (days): 0
Contract Price prior to this Change Order: $2,063,700.00	Contract Times prior to this Change Order: Substantial completion (days or ~~date~~): 360 Ready for final payment (days or ~~date~~): 390
[Increase] [~~Decrease~~] of this Change Order: $28,224.18	[~~Increase~~] [~~Decrease~~] of this Change Order: Substantial completion (days or ~~date~~): 0 Ready for final payment (days or ~~date~~): 0
Contract Price incorporating this Change Order: $2,091,924.18	Contract Times with all approved Change Orders: Substantial completion (days or ~~date~~): 360 Ready for final payment (days or ~~date~~): 390

RECOMMENDED:	ACCEPTED:	ACCEPTED:
Engineer: [signature]	Owner: _____	Contractor: Matthew Tuminski
Print: DOUGLAS CHAPMAN	Print: _____	Print: Matthew Tuminski
Date: 9-18-26	Date: _____	Date: 9-15-2026
Approved by Funding Agency (if applicable): _____		Date: _____

CALDWELL
Since 1887

August, 21, 2026

McGill Associates
1240 19th Street Lane NW
Hickory, NC 28601

Attention: Curtis Baker

Subject: 9575 Foundation Change Order

Mr. Baker,

Attached is revised Change Order based of your revisions: During subgrade inspection to verify bearing capacity on 03/05/26, soft residual soils were encountered which did not meet the required bearing of 4000psf. Excavation was deepened by 3ft and widened accordingly to maintain safe side slopes. The following day on 03/06/26, the subgrade was reinspected and two small areas of softer residual soils were found in the southwest corner of the excavation. These areas were undercut an additional 1-2 feet until stiff residual soils were found that met the 4000psf requirement. The over excavation was then brought back to grade with a 3ft +/- thick concrete mudmat which totaled 126 cubic yards. See attached BLE field reports.

Revised Change Order Request Amount	$ 3,120.00
	$19,750.00
	$ 2,049.88
Ozark OH&P 5%	1,246.00
Sub Total	$26,165.88
Caldwell PM Time and 5 % Markup	2,058.30
Total	$28,224.18

Let me know if you have any additional questions.

Sincerely,

Matt Tuminski
Project Manager
Caldwell Tanks, Inc

Finley Area Water System Improvements

DWI Project No. SRP-D-ARP-0198

Original Contract			Days	Date		Contract Amount
Substantial Completion			360	Oct. 22, 2026		
Final Completion			390	Nov. 21, 2026		**$ 2,063,700.00**
C.O.	**Line Item Adds**	**Description**	Units	QTY	Unit Price	Total
1		Undercut and Replacement	LS	1	$ 28,224.18	$ 28,224.18
						$ -
						$ -
						$ -
						$ -
						$ -
						$ -
						$ -
						$ -
						$ -
Total Change Order No. 1						**$ 28,224.18**

New Contract Total		Original	Add	New	
Contract Time	Days to Substantial	360	0	360	**$ 2,091,924.18**
	Days to Final	390	0	390	

City of Lenoir
Financial Summary
As of 08/31/2026

General Fund

	2026-2027 Budget	8/31/2026	% of Budget	Change from Previous Year	8/31/2025
Total Revenue	$ 27,104,230.00	$ 13,936,525.37	51%	$ 1,741,070.25	$ 12,195,455.12
Expenditures	$ 27,104,230.00	$ 4,995,726.87	18%	$ 161,301.76	$ 4,834,425.11
Over/Under	$ -	$ 8,940,798.50		$ 1,579,768.49	$ 7,361,030.01

Downtown District

	2026-2027 Budget	8/31/2026	% of Budget	Change from Previous Year	8/31/2025
Revenues	$ 285,875.00	$ 14,214.24	5%	$ (3,148.10)	$ 17,362.34
Expenditures	$ 285,875.00	$ 37,691.75	13%	$ 6,110.77	$ 31,580.98
Over/Under	$ -	$ (23,477.51)		$ (9,258.87)	$ (14,218.64)

Water/Sewer Fund

	2026-2027 Budget	8/31/2026	% of Budget	Change from Previous Year	8/31/2025
Revenues	$ 14,523,270.00	$ 2,179,046.83	15%	$ 52,867.06	$ 2,126,179.77
Expenditures	$ 14,523,270.00	$ 1,852,855.43	13%	$ 173,787.61	$ 1,679,067.82
Over/Under	$ -	$ 326,191.40		$ (120,920.55)	$ 447,111.95

City of Lenoir
Financial Summary By Department
As of 08/31/2026

General Fund					
	BUDGET	8/31/2026	8/31/2025	Difference	% of Budget
REVENUE					
PROPERTY TAXES	$ 11,509,984.00	$ 12,438,382.05	$ 11,683,001.49	$ 755,380.56	108%
SALES TAX	$ 6,630,325.00	$ -	$ -	$ -	0%
FRANCHISE TAX	$ 2,500,000.00	$ -	$ -	$ -	0%
SOLID WASTE FEE	$ 1,125,705.00	$ 187,986.21	$ 187,989.58	$ (3.37)	17%
OTHER	$ 5,338,216.00	$ 1,310,157.11	$ 324,464.05	$ 985,693.06	25%
TOTAL	$ 27,104,230.00	$ 13,936,525.37	$ 12,195,455.12	$ 1,741,070.25	51%
EXPENDITURES					
LEGISLATIVE	$ 447,051.00	$ 58,168.81	$ 105,997.05	$ (47,828.24)	13%
ADMINISTRATIVE	$ 892,576.00	$ 257,385.47	$ 250,269.35	$ 7,116.12	29%
FINANCE	$ 1,254,745.00	$ 206,347.84	$ 195,484.87	$ 10,862.97	16%
PLANNING	$ 588,647.00	$ 89,244.02	$ 130,099.89	$ (40,855.87)	15%
POLICE	$ 8,774,910.00	$ 1,504,744.26	$ 1,419,760.72	$ 84,983.54	17%
FIRE	$ 6,523,292.00	$ 1,009,965.63	$ 938,785.36	$ 71,180.27	15%
RECREATION	$ 2,133,394.00	$ 370,171.40	$ 412,568.90	$ (42,397.50)	17%
PUBLIC WORKS	$ 6,489,615.00	$ 1,499,699.44	$ 1,381,458.97	$ 118,240.47	23%
TOTAL	$ 27,104,230.00	$ 4,995,726.87	$ 4,834,425.11	$ 161,301.76	18%
OVER/UNDER	-	$ 8,940,798.50	$ 7,361,030.01	$ 1,579,768.49	32%
Downtown District					
	BUDGET	8/31/2026	8/31/2025	Difference	% of Budget
TOTAL REVENUES	$ 285,875.00	$ 14,214.24	$ 17,362.34	$ (3,148.10)	5%
TOTAL EXPENDITURE	$ 285,875.00	$ 37,691.75	$ 31,580.98	$ 6,110.77	13%
OVER/UNDER	-	$ (23,477.51)	$ (14,218.64)	$ (9,258.87)	-8%
Water/Sewer Fund					
	BUDGET	8/31/2026	8/31/2025	Difference	% of Budget
REVENUE					
WATER SALES	$ 8,254,288.00	$ 1,446,468.54	$ 1,374,990.43	$ 71,478.11	18%
SEWER SALES	$ 3,888,782.00	$ 667,583.29	$ 682,795.33	$ (15,212.04)	17%
CAPITAL RESERVE	$ 1,600,000.00	$ -		$ -	0%
OTHER	$ 780,200.00	$ 64,995.00	$ 68,394.01	$ (3,399.01)	8%
TOTAL REVENUES	$ 14,523,270.00	$ 2,179,046.83	$ 2,126,179.77	$ 52,867.06	15%
EXPENDITURES					
ADMIN & ENGINEERING	$ 580,590.00	$ 174,541.66	$ 108,237.46	$ 66,304.20	30%
WATER RESOURCES	$ 478,057.00	$ 167,528.77	$ 68,300.16	$ 99,228.61	35%
RHODHISS PLANT	$ 3,666,026.00	$ 282,821.17	$ 348,526.17	$ (65,705.00)	8%
WATER DISTRIBUTION	$ 2,997,400.00	$ 556,754.06	$ 626,020.17	$ (69,266.11)	19%
WASTEWATER COLLECTION	$ 2,766,617.00	$ 201,618.03	$ 174,792.44	$ 26,825.59	7%
WASTEWATER PRETREATMENT	$ 281,628.00	$ 67,174.12	$ 30,064.62	$ 37,109.50	24%
GUNPOWDER WASTEWATER PL	$ 903,474.00	$ 85,721.37	$ 67,632.14	$ 18,089.23	9%
LOWER CREEK WASTEWATER PL	$ 2,849,478.00	$ 316,696.24	$ 255,494.66	$ 61,201.58	11%
TOTAL EXPENDITURE	$ 14,523,270.00	$ 1,852,855.43	$ 1,679,067.82	$ 173,787.61	13%
OVER/UNDER	$ -	$ 326,191.40	$ 447,111.95	$ (120,920.55)	4%

October 2026

Sun	Mon	Tue	Wed	Thu	Fri	Sat
				1	2	3 Bloom Blast
4	5	6 6:00 p.m. City Council 6:00-9:00 p.m. National Night Out	7 9:00 a.m. Staff Mtg.	8 6:00 p.m. LBAB (City Hall, 3rd Floor)	9	10
11	12 Noon-City/County Services Committee Planning Board 5:30 p.m.	13 8:15 a.m. Economic Dev.Adv. Committee (Civic Center) 2:00 p.m. ABC Board	14	15	16	17
18	19 6:00 p.m. Parks & Recreation Advisory Board (MLK Center)	20 6:00 p.m. City Council	21 9:00 a.m. Staff Mtg.	22	23	24
25	26	27 8:30 a.m. Committee of the Whole (City Hall, 3rd Floor)	28 Noon-Foothills Regional Airport Authority	29	30 4:00-6:00 p.m. Downtown Spooktacular 5:30-8:30 p.m. Friday Night Live- News @ 11	31

City of Lenoir
P.O. Box 958
Lenoir, N.C. 28645
www.cityoflenoir.com
757-2200 / 757-2162 fax

Joseph L. Gibbons, Mayor
Scott E. Hildebran, City Manager
Lauren Hartley, City Clerk

Western Piedmont
Council of Governments

1880 Second Avenue NW | Hickory, 28601
PO Box 9026 | Hickory, NC 28603
828.322.9191 | Fax: 828.322.5991 | www.wpcog.org

Creative Regional Solutions Since 1968

Memorandum

Date: September 23, 2026
To: WPCOG Local Government Managers, Administrators, and Clerks
From: Anthony W. Starr, Executive Director
Subject: WPCOG Charter and Bylaws Updates – ACTION NEEDED BY YOUR BOARD/COUNCIL

The Western Piedmont Council of Governments Policy Board proposes to update the WPCOG Charter and Bylaws. Last updated in 2007, the Charter and Bylaws updates serve to increase transparency and clarity for our local governments. The Executive Committee and the Policy Board unanimously approved and recommended these changes. These updates have also been reviewed by WPCOG legal counsel. The draft Charter and Bylaws are included with this communication for your review.

Summary of Changes

- Adds explicit language regarding the COG's authorization to act as the regional public housing authority (Article VI, Section 1). This was recommended to clarify authority to assist in bonds (no obligation to WPCOG or local governments) for tax advantages for developers of affordable housing projects. Original authorization for the WPCOG to act as a regional public housing authority was given in 1977.
- Changes the vote threshold for action to a simple majority instead of a two-thirds majority. (Article VII, Section 4; Article XI, Section 4). This is consistent with local government voting procedures.
- Eliminates the Treasurer position, while adding another at-large position on the Executive Committee (Article VIII, Sections 1 and 2). This is consistent with common local government structure.
- Eliminates the Secretary position while adding another at-large position on the Executive Committee and add reference to a staff Clerk to the Board (Article VIII, Section 2). This is consistent with common local government structure.
- A reference to the WPCOG finance officer was added. (Article X, Section 3). WPCOG is subject to the NC Local Government Budget and Fiscal Control Act like its municipalities and counties.
- Minor language clarifications that don't impact the intent or structure of a section.

As outlined in the Charter and Bylaws, any modification must be sent to each member government for ratification, with approval by three-fourths of the members of the WPCOG required (21 of the 28 members). Following approval by member governments, a second reading of the changes must be held at the next regular Policy Board meeting, at which time actions of the members will be reported and accepted.

The effective date of the revised Charter and Bylaws would be the second reading of the Policy Board following ratification by the required number of members. The Policy Board intends to give final approval at its November meeting. Please let us know if you have questions or require further information.

We request that our local government's governing boards approve the proposed changes and let us know by Thursday, November 12, 2026.

Executive Committee: Randy Burns, Chair | Larry Yoder, Vice Chair | Larry Chapman, Secretary | George B. Holleman, Treasurer | Joseph L. Gibbons, Past Chair | **At-Large Members:** Mike LaBrose | Cole Setzer | Jill Patton | Chris Jernigan | **Executive Director,** Anthony W. Starr

Serving: Alexander County | Taylorsville | Burke County | Connelly Springs | Drexel | Glen Alpine | Hildebran | Morganton | Rutherford College | Valdese | Caldwell County | Cajah's Mountain | Cedar Rock | Gamewell | Granite Falls | Hudson | Lenoir | Rhodhiss | Sawmills | Catawba County | Brookford | Catawba | Claremont | Conover | Hickory | Long View | Maiden | Newton

CHARTER OF THE WESTERN PIEDMONT COUNCIL OF GOVERNMENTS

I. Name

The Council shall be called Western Piedmont Council of Governments (WPCOG).

II. Powers, Duties and Functions

The Western Piedmont Council of Governments shall have the following powers:

A) To apply for, accept, receive and dispense funds and grants made available to it by the State of North Carolina or any agency thereof, the United States of America or any agency thereof, any unit of local government (whether or not a member of the Council) and any private civic agency;

B) To employ personnel;

C) To contract with consultants;

D) To contract with the State of North Carolina, any other state, the United States of America, or any agency thereof, for services;

E) To study regional governmental problems, including matters affecting health, safety, welfare, education, recreation, economic conditions, regional planning and regional development;

F) To promote cooperative arrangements and coordinated action among its member governments;

G) To make recommendations for review and action to its member governments and other public agencies which perform functions within the region in which its member governments are located;

H) For the purpose of meeting the council's office space and program needs, to acquire real property by purchase, gift, or otherwise, and to improve that property. The council may pledge real property as security for indebtedness used to finance acquisition of that property or for improvements to that real property, subject to approval by the Local Government Commission as required under North Carolina General Statute 159—153. The council may not exercise the power of eminent domain;

I) Any other powers that are exercised or capable of exercise by its member governments and desirable for dealing with problems of mutual concern to the extent such powers are specifically delegated to it from time to time by resolution of the governing board of each of its member governments which are affected thereby.

J) Any other powers authorized by applicable law and duly conferred upon or delegated to the Council in the manner required by such law.

III. Delegates

Each member government shall appoint a representative of such member government to serve as the official delegate to the Policy Board of the Western Piedmont Council of Governments. An alternate delegate shall also be appointed to serve when the official delegate is unable to attend regular and special Council meetings.

A majority of the appointed representatives must be elected officials. No member government employee shall be eligible to serve as a delegate or alternate delegate.

In addition, the Policy Board shall appoint seven (7) additional delegates to satisfy requirements of the Economic Development Administration (EDA) for board composition.

The term of office, method for filling vacancies, and method of compensation and allowances shall be as set forth in the Council Bylaws.

IV. Financial Support

The Western Piedmont Council of Governments shall receive financial support for its operations and programs as follows:

A) Regular Assessments – The member governments of the Western Piedmont Council of Governments shall fund the Council operations by means of assessments on a per capita basis as determined by the Policy Board of the Council. The per capita share of a member government shall be based on the latest North Carolina Office of State Budget estimates and shall include the population within the geographic area of the member government. Counties shall provide funds per capita after subtracting the populations of member governments within the geography of such county.

B) Special Assessments – The member governments shall fund certain Council operations and programs by means of special assessments as prescribed by law and determined by the Policy Board.

C) State and Federal Grants – The Council shall apply for and receive state and federal grants for programs approved by the Policy Board of the Council.

D) Private and Charitable Contributions – The Council shall apply for and receive and be entitled to receive funds for its operations and programs from charitable and private sources approved by the Policy Board of the Council.

V. Dissolution

A) The Western Piedmont Council of Governments shall be dissolved upon the unanimous vote of all member governments comprising the Council and the adoption of concurrent resolutions of all members of the Western Piedmont Council of Governments setting forth the dissolution and the reason therefore.

B) Any member government may withdraw from the Western Piedmont Council of Governments at the end of any fiscal year by giving at least 60 days' written notice to each of the other members. Withdrawal of a member government shall not dissolve the Council if at least two members remain.

C) Following adoption of concurrent resolutions dissolving the Western Piedmont Council of Governments or following withdrawal of all member governments from the Western Piedmont Council of Governments, the Council shall proceed to liquidate its assets and pay all liabilities within a 12-month period beginning with the date of the adoption of such resolutions or withdrawal of such members. Any assets remaining following the payment of liabilities shall be distributed in cash or in kind to the member governments in such proportions as the Policy Board of the Council may decide. Such distribution shall be made only after a unanimous vote of the members authorizing the distribution.

VI. Amendment

The Charter of the Western Piedmont Council of Governments may be amended upon the adoption of concurrent resolutions by three fourths of the existing members of the Council approving such amendment. A three-fourths majority shall be required to approve amendments to the Charter.

VII. This revised Charter shall be effective upon ratification by the required three-fourths majority of member governments.

This _____ of _____, 2026.

Amended 11/27/90
Amended 2/23/04
Amended 5/22/07
Amended 3/23/2010
Amended _____/2026

BYLAWS OF THE WESTERN PIEDMONT COUNCIL OF GOVERNMENTS

Article I. Charter

Section 1. Charter Agreement

The Western Piedmont Council of Governments is organized and exists pursuant to concurrent resolutions and amendments thereto adopted by and among the Counties of Alexander, Burke, Caldwell and Catawba; and the municipalities of Brookford, Cajah's Mountain, Catawba, Cedar Rock, Claremont, Connelly Springs, Conover, Drexel, Gamewell, Glen Alpine, Granite Falls, Hickory, Hildebran, Hudson, Lenoir, Long View, Maiden, Morganton, Newton, Rhodhiss, Rutherford College, Sawmills, Taylorsville and Valdese, in accordance with N.C. General Statute 160A-470, et. seq., as amended.

Article II. Creation

Section 1. Name of Council

The name of the regional council of governments hereby created is the "Western Piedmont Council of Governments," hereinafter referred to as the "Council." The address of the Council is 1880 2nd Avenue NW, Hickory, NC 28601.

Section 2. Legal Authority

The Council shall exist and function pursuant to N.C. General Statute 160A-470, et. seq., and other applicable laws governing regional councils of governments and public authorities.

Article III. Definition of Terms

Section 1. Terms

A. Council – the Western Piedmont Council of Governments.

B. Delegate – a representative of a member government appointed to the Policy Board by the participating member government.

C. Appointed Delegate – a minority representative or private citizen appointed to the WPCOG Policy Board by its delegates. It is the goal of the WPCOG, in compliance with the U.S. Economic Development Administration (EDA) regulations, to provide for minority representation and private citizen membership on the WPCOG Policy Board. In order to achieve this goal, seven additional delegates will be appointed by the WPCOG Policy Board who are broadly representative of the principal economic interests of the WPCOG area including the interests of the area's minority and low-income populations. These Appointed Delegates must be private citizens who are neither elected

officials nor employees of a member government. Minority representation will be obtained by working with minority groups and agencies in the area covered by the WPCOG.

D. Member Governments – those local governmental units which are charter members of the Council or approved for membership pursuant to the provisions of these Bylaws.

E. Policy Board – the governing body of the Council comprised of one representative from each member government, known as a delegate, and seven non-elected representatives.

F. Region E – Region E consists of the geographic area of Alexander, Burke, Caldwell and Catawba Counties.

G. Year – fiscal year of July 1 through June 30, unless otherwise defined.

Article IV. Membership

Section 1. Membership

The members of the Council shall be the following governmental units within Region E: Counties of Alexander, Burke, Caldwell and Catawba; and the municipalities of Brookford, Cajah's Mountain, Catawba, Cedar Rock, Claremont, Connelly Springs, Conover, Drexel, Gamewell, Glen Alpine, Granite Falls, Hickory, Hildebran, Hudson, Lenoir, Long View, Maiden, Morganton, Newton, Rhodhiss, Rutherford College, Sawmills, Taylorsville and Valdese, and such other governmental units within as may apply for and be accepted as a member government pursuant to these Bylaws.

Section 2. Application for Membership

A. Any county or municipality within Region E is eligible for membership in the Council. Upon written application, a prospective member shall be subject to the approval of a two-thirds majority of existing members. Such approval shall be given or withheld by each member government through its delegate on the Policy Board of the Council.

B. Following approval, a prospective new member shall adopt a resolution adopting the Charter and Bylaws of the Council, as amended.

C. Following approval, a new member shall appoint a delegate and an alternate delegate to represent it on the Policy Board of the Council.

Section 3. Withdrawal

Any member may withdraw from membership on the Council at the end of any fiscal year provided notice of withdrawal is made to the Policy Board of the Council by a resolution of withdrawal delivered to the Policy Board at least 60 days from the end of any fiscal year. The Council shall continue and exist so long as two or more member governments from Region E remain members of the Council.

Section 4. Dissolution

Dissolution shall take place as set forth in the Charter. Dissolution shall be incomplete until approval of dissolution and liquidation is approved by appropriate state and federal authorities.

Article V. Purpose

Section 1. Purposes

The Council is formed and serves the following purposes:

A. To promote intergovernmental coordination in communications, planning efforts, and common regional problem solving;

B. After survey and analysis, to develop and formalize policy recommendations concerning matters within the jurisdiction of local governments and having regional significance;

C. To provide an expert resource for information and in-the-field assistance in planning for a broad mix of local government services;

D. To help establish and meet regional development goals;

E. To develop and implement policy recommendations concerning local government matters having regional significance;

F. To represent the interests and needs of WPCOG member governments to state and federal agencies;

G. To be the umbrella agency for all policy and administrative coordination for area-wide multi-jurisdictional problems and agencies;

H. To retain enough flexibility in staff time and organizational structure to be able to respond to unforeseen local and regional needs;

I. To identify and respond to potential local or regional threats or opportunities;

J. To be efficient with staff time and resources available to the WPCOG.

The Council shall strive to promote harmony and cooperation among its members. It shall seek to deal with urban and rural problems in a manner which is mutually satisfactory and shall respect the autonomy of all local governments within the region.

Article VI. Powers, Duties, Functions

Section 1. Powers, Duties, Functions

The Western Piedmont Council of Governments shall have those powers set forth in N.C. General Statute 160A-475, as amended, which powers are incorporated herein by reference. In addition, the Council shall have the following powers:

A. To purchase equipment, rent office space, and enter into contracts to the extent that such activities are authorized by budgets or by specific resolutions duly adopted by all participating governmental units and are within the limits of funds appropriated to the Council by the participating governmental units for such purposes;

B. To request and receive contributions of research assistance from its own agencies, private research organizations, civic foundations, institutions of higher learning and other organizations;

C. To act as the official clearinghouse and reviewing agency of the participating governmental units for all programs (federal, state or private) requiring regional review;

D. To adopt such rules and regulations relating to the procedures to be followed by the Council as the said Council shall find to be appropriate;

E. To perform and carry out such other powers, duties and responsibilities as may be authorized by North Carolina law, except insofar as the same may conflict with the provisions of these Bylaws; provided, however, the Council shall have no power to levy any tax or to acquire any property by condemnation;

F. To act as the regional public housing authority, as originally authorized in 1977, with all the associated duties and powers pursuant to federal and state law and regulations including Chapter 157 of the N.C. General Statutes, as amended.

Article VII. Policy Board

Section 1. Governing Body

The governing body of the Council shall be known as the "Policy Board."

Section 2. Number, Term and Composition of Policy Board

The Policy Board shall consist of one delegate from each member government. An alternate delegate from each member shall be selected to attend Policy Board meetings and otherwise act for the delegate in the event the delegate is unable to attend. Each member government shall be entitled to one vote on all matters coming before the Council requiring a vote.

A delegate and an alternate delegate shall be a representative of a member government who shall serve on the Policy Board of the Council at the pleasure of the member government. Such delegates shall serve at the pleasure of such member government until their successors are appointed. The alternate delegate shall attend Council meetings when the delegate is unable to attend.

In addition, there will be seven delegates appointed by the WPCOG Policy Board. Each of these members shall be entitled to one vote on all matters coming before the Council requiring a vote. The term of the appointment shall be for a period of two years and may be renewed at the option of the Board.

Section 3. Vacancies

In the event a delegate or alternate delegate to the Policy Board dies, retires, resigns, or otherwise ceases to serve, the member government shall fill the vacated position with a representative of such member government appointed to serve in the capacity of delegate or alternate delegate, as the case may be.

If this person is an appointed delegate, the Policy Board will appoint another person to meet non-elected or minority requirements.

Section 4. Quorum

A simple majority of the membership of the Council shall constitute a quorum for conducting business. The number required for a quorum shall not be affected by vacancies. A delegate who has withdrawn early from a meeting without being excused by a simple majority vote of the remaining delegates and appointed delegates present shall be counted as present for purposes of determining whether a quorum is present.

The affirmative vote of a simple majority of the delegates and appointed delegates present shall be necessary to act favorably on any matter unless otherwise required in these Bylaws or the Charter.

Section 5. Meetings

A. Regular – The Council shall regularly meet bimonthly on the fourth Tuesday of each month beginning in January of each calendar year at 6:00 pm at member government offices, or other locations in their jurisdictions, on a rotation basis, or such other time or place as the Policy Board may select.

Notice of each regular meeting shall be emailed to delegates, alternate delegates and appointed delegates prior to such meeting at their respective addresses or such other address as a member government may designate.

B. Special – Special meetings may be called by the Board Chair, Vice-Chair, or any five delegates of the Council upon five-day written notice, or two-day written notice if such notice is personally delivered to the delegates, alternate delegates and appointed delegates.

Written notice of special meetings shall contain a brief description of the business to be conducted at such special meeting and be consistent with the provisions of North Carolina law as it pertains to open meetings.

Section 6. Open Meetings

Meetings of the Policy Board, Executive Committee, and any other committee or public body of the Council shall comply with the North Carolina Open Meetings Law, Article 33C of Chapter 143 of the North Carolina General Statutes, to the extent applicable. The schedule of regular meetings will be maintained with the Clerk to the Board of the Council and made available from the Clerk to the Board or from the Executive Director during regular office hours at the normal place of business.

Section 7. Voting

Each member government shall be entitled to one vote on all matters that come before the Council requiring a vote. The vote may be cast by the delegate or alternate delegate of each member government.

Each appointed delegate shall also be entitled to one vote on all matters that come before the Council requiring a vote.

Section 8. Excuses from Voting

No member or appointed delegate shall be excused from voting except upon matters involving the consideration of his or her own financial interest or official conduct. In all other cases, a failure to vote by a delegate or appointed delegate who is physically present at a regular or special meeting, or who has withdrawn without being excused by a simple majority vote of the remaining delegates and appointed delegates, shall be recorded as an affirmative vote.

Section 9. Minutes to be Kept; Ayes and Noes

The Clerk to the Board shall keep full and accurate minutes of the meetings and proceedings of the Council, which shall be available for public inspection. The Clerk to the Board shall record the results of each vote in the minutes. Upon the request of any member of the Council, the ayes and noes upon any question shall be taken and recorded.

Section 10. Procedures

Procedural matters coming before the Council shall be conducted according to generally accepted rules of parliamentary procedure.

At all meetings of the Council, the order of business shall be as follows:

A. Meeting Called to Order.
B. Minutes of Previous Meeting (Correction of Minutes).
C. Unfinished Business.
D. New Business.
E. Announcements.
F. Adjournment.

Section 11. Compensation

The officers, delegates, alternate delegates and appointed delegates shall serve without compensation or remuneration for their services. This section shall not, however, prohibit reimbursement for expenses incurred while on Council business and in accordance with Council fiscal policies.

Article VIII. Organizational Structure, Procedures

Section 1. Election of Officers

At the last regular meeting of the Policy Board in a calendar year, the Council shall elect a board chair, vice-chair, immediate past chair, six at-large executive committee members, and such additional officers as the Council finds necessary in the proper performance of its duties, to serve for one year or until their successors have been duly installed. Installation of officers shall take place at the next regular meeting of the Council following their election.

Section 2. Duties of Officers

A. Board Chair – The Board Chair shall preside at all meetings of the Council at which he or she is present and shall conduct said meetings in an orderly and impartial manner so as to permit a free and full discussion by the membership of such matters as may be brought before the Policy Board.

The Board Chair shall have the same voting rights as other members. He or she shall be responsible for the implementation of the policies established and the action taken by the Council; appoint such committees as he or she finds necessary or desirable; have all the powers and duties customarily pertaining to the office of Chair of the Board; and perform such further duties as may be assigned to him or her by the Council.

B. Vice-Chair – The Vice-Chair shall perform all duties of the Chairman in the absence of the Chairman or in event of the inability of the Chairman to act, and shall perform such other duties as the Council may delegate.

All other officers elected by the Council shall perform such duties as may be prescribed by the Council.

Section 3. Reports

The Council shall prepare and submit an annual written report of its activities, including a financial statement, to the participating governmental units and the public.

Article IX. Committees

Section 1. Executive Committee

The Executive Committee shall be composed of the following elected officers: Board Chair, Vice-Chair, the Immediate Past Chair, and six At-Large Members. In the event an immediate Past Chair is not eligible to serve as a Council delegate, an additional at-large member shall be chosen to serve for a one-year term. If the Past Chair office continues to be vacant beyond the first year, the at-large position may be filled for an additional one-year term.

The Executive Committee shall meet at a minimum in the months of February, April, June, August, October and December, and such other times as called by the Chair. The time and place shall be determined by the Chair.

The Executive Committee is empowered to act for the Policy Board in matters of personnel, legal, administration, finance, and other matters as expressly authorized by the Policy Board through resolution.

Representation on the Executive Committee shall also meet the Economic Development Administration's requirements for board composition.

Should any vacancy occur after November, the Executive Committee shall recommend appointment of a member to fill the vacancy at the next regularly scheduled Policy Board meeting.

Section 2. Nominating Committee

The Board Chair shall appoint an ad hoc nominating committee of four persons from the membership to research and seek out suitable candidates for nomination to Council office. Their report is due at the regular November meeting of the Council in the calendar year for consideration and action. This report shall be received along with general nominations from the floor and shall constitute the only legitimate candidates for offices to be filled.

Section 3. Additional Committees

The Board Chair may appoint such additional committees as he or she finds necessary or desirable.

Section 4. Committee Procedures

Committees shall, in the absence of additional directives from the Board Chair and Council, follow procedures outlined in "Council Committee Policies and Procedures." Voting procedures for committees shall be as for the Council, as provided in Article VII, Sections 7-9.

Article X. Staff and Administration

Section 1. Staff

It shall be the policy of the Council to employ a staff of qualified professionals and other support staff and pay to them such compensation as it shall deem necessary and advisable to carry out their duties and implement Council projects, programs and functions.

Section 2. Appointment of Executive Director

The Executive Director shall be appointed by the Policy Board based on recommendations of the Executive Committee and shall serve at the pleasure of the Policy Board. The Executive Director shall be appointed solely on the basis of his or her executive and administrative qualifications.

Section 3. Powers and Duties of Executive Director

The Executive Director is the chief administrator of the Council. He or she is responsible to the Policy Board for the administration of all departments under the Policy Board's general control and has the following powers and duties:

A. He or she shall appoint and suspend or remove all Council employees and agents. Such appointments, suspensions and removals shall be in accordance with any general personnel rules, regulations, policies or ordinances as the Policy Board may adopt.

B. He or she shall direct and supervise the administration of all Council offices, departments, boards, committees and agencies under the general control of the Policy Board, subject to the general direction and control of the Policy Board.

C. He or she shall attend all meetings of the Policy Board and Executive Committee and recommend any measure that he considers expedient.

D. He or she shall see that the orders, resolutions and regulations of the Policy Board are faithfully executed within the Council.

E. He or she shall prepare and submit the annual budget to the Policy Board and act as budget officer.

F. He or she shall annually submit to the Policy Board and make available to the public a complete report on the finances and administrative activities of the Council as of the end of the fiscal year.

G. He or she shall appoint and supervise a finance director/officer to fulfill the requirements of N.C. General Statutes Chapter 159, the N.C. Local Government Budget and Fiscal Control Act.

H. He or she shall appoint and supervise a clerk to the board who shall keep all official minutes, books, and records and make them available for public inspection to the extent required by law. The clerk to the board shall attest to official actions of the Council and certify actions and accounts taken by that body.

I. He or she shall make any other reports that the Policy Board may require concerning the operations of Council offices, departments, committees and agencies.

J. He or she shall perform other duties that may be required or authorized by the Policy Board.

Article XI. Fiscal Control

Section 1. Policy Board to Direct Fiscal Policy of the Council

The Policy Board has and shall exercise the responsibility of developing and directing the fiscal policy of the Council under the provisions and procedures of the Local Government Budget and Fiscal Control Act as they apply to a "public authority." The Policy Board shall use a full accrual accounting system until another is adopted in accordance with Article XIII of the Bylaws entitled "Amendments."

Section 2. Annual Balanced Budget

The Council shall operate under an annual balanced budget adopted and administered in accordance with the Local Government Budget & Fiscal Control Act. The budget ordinance shall cover a fiscal year beginning July 1 and ending June 30. Only expenditures authorized in the budget may be disbursed.

Section 3. Budget Officer

The Executive Director shall serve as the Budget Officer. He or she shall have the power to sign on behalf of the Council, agreements or other instruments to be executed by the Council in the conduct of its business. Unless otherwise provided, he or she shall sign or countersign checks and vouchers in payment of obligations of the Council. In case of absence of the

Executive Director, any other Executive Committee member, or other designated official, may be empowered to countersign checks and vouchers in payment of obligations to the Council.

Section 4. Budget Requests

At the March meeting of the Council, a proposed balanced budget for the next fiscal year shall be presented. This preliminary budget as amended constitutes a first reading and shall be submitted the first week in April to each participating government for its review. At the next regular meeting of the Council in May, the Council shall conduct a public hearing and perform a second reading making any final changes necessary. The results of this meeting will constitute final action and adoption of the budget through a simple majority vote.

The budget request shall be an estimate of the financial requirements of the Council for the budget year and shall be made in such form and detail with such supporting information and justifications as the Budget Officer may prescribe. The revenue estimate shall be an estimate of all revenues to be realized by the Council during the budget year.

Section 5. Regular Assessments

The annual budget shall set forth the per capita share of the budget to be funded by each member as provided in the Charter.

Section 6. Special Assessments

If, as a result of participation in a Council program with special funding requirements, a governmental unit is required to offer separate funding for its share, this shall be made known in the budget request to that governmental unit.

Section 7. Budget Approval

Upon approval of the budget by all participating governmental units, each participant governmental unit shall appropriate its share of the budget and shall forward this amount to the Council at the beginning of each fiscal year.

Section 8. Annual Independent Audit

The Council shall have its accounts audited as soon as possible after the close of each fiscal year by a certified public accountant. The auditor shall be selected by and shall report directly to the Policy Board. Upon completion of the examination, the auditor shall prepare a written report embodying financial statements and his or her opinion and comments relating thereto.

Copies of this report shall be distributed to each Council delegate or alternate at the next regular Policy Board meeting following the publication of the report.

Article XII. Prohibited Activities

Section 1. Prohibited Activities

Notwithstanding any other provision of these articles, this organization shall not carry on any activities prohibited by the following.

A) An organization exempt from federal income tax under Section 501(c)(3) of the Internal Revenue Code of 1954 or the corresponding provision of any future United States Internal Revenue Law, or

B) An organization contribution to which are deductible under Section 170(c)(2) of the Internal Revenue Code of 1954 or any other corresponding provision of any future United States Internal Revenue Law.

Article XIII. Amendment of Bylaws; Effective Date

Section 1. Amendment of Bylaws

Any proposed amendment, repeal, or alteration, in whole or in part, of these Bylaws shall be submitted in writing and presented for a first reading at a regular meeting of the Policy Board. This shall constitute an official first reading, after which the proposed amendment shall be transmitted to each member government for consideration and ratification. Ratification by three-fourths of the existing member governments shall be required. At the next regular meeting of the Policy Board following receipt of the required ratifications, the proposed amendment shall be presented for a second reading, at which the member governments' actions shall be reported and accepted.

Section 2. Effective Date

These revised Bylaws shall be in full force and effect from and after the date ratified by the required three-fourths majority of member governments and the Policy Board.

ADOPTED THIS _____OF _____, 2026.

Amended November 27, 1990
Amended February 23, 2004
Amended May 22, 2007
Amended _____, 2026

CITY OF LENOIR

LISTING OF
CITY COUNCIL MEETINGS FOR 2027

JANUARY		
City Council	Tuesday, January 5	6:00 p.m.
City Council	Tuesday, January 19	6:00 p.m.
Committee of the Whole	Tuesday, January 26	8:30 a.m.
FEBRUARY		
City Council	Tuesday, February 2	6:00 p.m.
City Council	Tuesday, February 16	6:00 p.m.
Committee of the Whole	Tuesday, February 23	8:30 a.m.
MARCH		
City Council	Tuesday, March 2	6:00 p.m.
City Council	Tuesday, March 16	6:00 p.m.
Committee of the Whole	Tuesday, March 23	8:30 a.m.
APRIL		
City Council	Tuesday, April 6	6:00 p.m.
City Council	Tuesday, April 20	6:00 p.m.
Committee of the Whole	Tuesday, April 27	8:30 a.m.
MAY		
City Council	Monday, May 3	6:00 p.m.
City Council	Tuesday, May 18	6:00 p.m.
Committee of the Whole	Tuesday, May 25	8:30 a.m.
JUNE		
City Council	Tuesday, June 1	6:00 p.m.
City Council	Tuesday, June 15	6:00 p.m.
Committee of the Whole	Tuesday, June 22	8:30 a.m.

JULY

City Council	Tuesday, July 20	6:00 p.m.

Only one meeting in July

AUGUST

City Council	Tuesday, August 3	6:00 p.m.
City Council	Tuesday, August 17	6:00 p.m.
Committee of the Whole	Tuesday, August 24	8:30 a.m.

SEPTEMBER

City Council	Tuesday, September 7	6:00 p.m.
City Council	Tuesday, September 21	6:00 p.m.
Committee of the Whole	Tuesday, September 28	8:30 a.m.

OCTOBER

City Council	Tuesday, October 5	6:00 p.m.
City Council	Tuesday, October 19	6:00 p.m.
Committee of the Whole	Tuesday, October 26	8:30 a.m.

NOVEMBER

City Council	Tuesday, November 2	6:00 p.m.

Only one meeting in November

DECEMBER

City Council	Tuesday, December 7	5:00 p.m.*
City Council	Tuesday, December 21	6:00 p.m.

*Note: meeting time

2027 SCHEDULE OF EVENTS

NCLM MEETINGS	Event
February 17	Town & State Dinner (Raleigh)
May 4 - 6	Annual City Vision Conference (Winston-Salem)

NLC MEETINGS	Event
March 15 - 17	Congressional City Conference (Washington, DC)
November 17 - 20	NLC City Summit (Houston, TX)

CITY OF LENOIR

2027 HOLIDAY SCHEDULE

Friday, January 1	New Year's Day
Monday, January 18	Martin Luther King, Jr. Day
Friday, March 26	Good Friday
Monday, May 31	Memorial Day
Monday, July 5	Independence Day
Monday, September 6	Labor Day
Thursday, November 11	Veterans Day
Thursday, November 25 Friday, November 26	Thanksgiving Holiday
Thursday, Friday & Monday, December 23, 24, & 27	Christmas Holiday

City of Lenoir

City Council Action Form

I. Agenda Item:

Approval Parking Lot Agreement Renewal; Public Parking Lot Agreement Renewal between the City of Lenoir, First Baptist Church of Lenoir, and the County of Caldwell for the property located on the north side of Ashe Avenue behind First Baptist Church (owned by First Baptist Church), as submitted. For use of the property, the City and County will share all costs and expenses equally, on a 50/50 basis, up to $16,500.00 toward the costs of certain improvements to the parking area. The lease will become effective upon execution of all parties for a term of 20 years.

II. Background Information:

The City and Caldwell County have historically leased this property, owned by First Baptist Church of Lenoir for public parking, outside of the times the Church has exclusive use of the parking area on Sundays and at other times when needed during special services or functions at the Church. The Church also reserves the right to designate parking spaces for the Church staff and for the required number of handicapped parking spaces.

For use of the property, the City and County will share all costs and expenses equally, on a 50/50 basis, up to $16,500.00 toward the costs of certain improvements to the parking area. These improvements are repairing the low spot located at stormwater infrastructure, filling major cracks that exist at the time of execution of this agreement, and sealcoating and striping the parking area. The parking lot improvements will be completed as soon as reasonable after contract execution based on seasonal weather conditions and contractor availability. A contractor will perform filling major cracks, sealcoating, and striping, for which the City and County will pay upon completion up to $15,975.00. The City will pay this figure and the County will reimburse the City $8,250.00. The City will repair the low spot at the storm infrastructure for while it will be credited $525.00 toward its one-half of the City and County's $16,500.00 obligation. Thereafter, the City and County will share the costs of normal maintenance and upkeep.

III. Staff Recommendation:

Recommend Approval of the Public Parking Lot Agreement Renewal by and between the City of Lenoir, First Baptist Church of Lenoir and the County of Caldwell for the property located on the north side of Ashe Avenue behind First Baptist Church (owned by First Baptist Church) for a term of 20 years.

IV. Reviewed By:

Jon Hogan - Public Works Director

V. Attachments:

1. Parking Lot Lease-First Baptist Church_09.29.26_Final
2. First Baptist Church Parking Lot Agreement_Map

STATE OF NORTH CAROLINA]
]
COUNTY OF CALDWELL]

PUBLIC PARKING AGREEMENT

THIS PUBLIC PARKING AGREEMENT made this _____ day of _____, 2026, by and between **FIRST BAPTIST CHURCH OF LENOIR**, a North Carolina non-profit corporation (hereinafter referred to as "**the Church**") and **CITY OF LENOIR**, a North Carolina municipal corporation (hereinafter referred to as "**the City**") and **COUNTY OF CALDWELL**, a subdivision of the State of North Carolina (hereinafter referred to as "**the County**");

W I T N E S S E T H;

That Whereas, the Church is the owner of certain real property located on the north side of Ashe Avenue in the City of Lenoir and more particularly described in a deed recorded in Book 1169, at Page 1105, Caldwell County Registry; and

Whereas, the City is the owner of certain real property located on the west side of Ridge Street near the intersection with Ashe Avenue in the City of Lenoir and more particularly described in deeds recorded in Book 746, at Page 808, and in Book 692, at Page 199, Caldwell County Registry; and

Whereas, there is a parking lot or lots located behind the present First Baptist Church building, which parking lots extend from behind the church buildings adjoining Ashe Avenue to Ridge Street and being located on the property of the Church and also on the property of the City as it extends to Ridge Street; and

Whereas, the Church, the City and the County have reached agreement regarding improvements to be made to such parking areas and all parties desire to set their agreement in writing.

NOW, THEREFORE, in consideration of the mutual covenants and stipulations set forth herein and in further consideration of the sum of Ten ($10.00), the parties agree as follows:

1. **Property Subject to Agreement**. The property subject to this Agreement is the parking areas located behind the First Baptist Church building and extending adjacent to Ashe Avenue and extending to Ridge Street in the City of Lenoir and being located partly on the property of the Church as described in Deed recorded in Book 1169, at Page 1105, Caldwell County Registry, and partly on the property of the City as described in deeds recorded in Book 746, at Page 808, and in Book 692, at Page 199, Caldwell County Registry (hereinafter referred to as "**the Parking Area**").

2. **Consideration**. The City and County will share all costs and expenses equally, on a 50/50 basis, up to $16,500.00 toward the costs of certain improvements to the parking area. These improvements are repairing the low spot located at stormwater infrastructure, filling major cracks that exist at the time of execution of this agreement, and sealcoating and striping the parking area. The parking lot improvements will be completed as soon as reasonable after contract execution based on seasonal weather conditions and contractor availability. A contractor will perform filling major cracks, sealcoating, and striping, for which the City and County will pay upon completion up to $15,975.00. The City will pay this figure and the County will reimburse the City $8,250.00. The City will repair the low spot at

the storm infrastructure for which it will be credited $525.00 toward its one-half of the City and County's $16,500.00 obligation. Thereafter, the City and County will share the costs of normal maintenance and upkeep.

3. **Public Parking Area & Term**. The Church, the City and the County, agree that for and during the next Twenty (20) years from the date of this agreement, the Parking Area shall be and remain a public parking area for the use and benefit of all the parties to this agreement, the citizens of Caldwell County, the citizens of Lenoir and the members and guests of the Church.

4. **Reservation of Use**. The Church reserves the right to the exclusive use of the parking area on Sundays and at other times when needed during special services or functions at the Church. The Church also reserves the right to designate parking spaces for the Church staff and for the required number of handicapped parking spaces.

5. **Termination of Agreement**. The Church shall have the right and privilege of terminating this agreement, in whole or in part, at any time during the twenty-year term of this agreement. In the event of such termination, the church shall pay the County and the City the amount they invested in improving the parking area, less five (5%) percent per year for each year that has expired from the date of this Agreement to the date of termination. Said five percent to be calculated based upon the area withdrawn from the parking area and based upon costs of the improvements as reported to the Church by the City and the County.

6. **Term of Agreement**. Pursuant to the Agreement, the Parking Area shall become and remain a public parking area for the term of Twenty (20) Years from the date of this Agreement subject to the Reservation of Use set forth above.

7. **Property of the Church**. The parties acknowledge that the parking area located on the property of the Church is and shall remain the property of the Church subject to the rights and privileges of the County and the City as set out herein. The parties further acknowledge that at the end of the term of this Agreement, the Parking Area on the property of the Church shall be and shall remain the sole and separate property of the Church free from any condition or limitations imposed by this agreement.

IN WITNESS WHEREOF, the parties have caused this instrument to be executed in their respective names by authority duly granted and by action taken by their respective bodies.

FIRST BAPTIST CHURCH OF LENOIR
a North Carolina non-profit corporation

by:_____

CITY OF LENOIR

by:_____

COUNTY OF CALDWELL

by:_____


Road Map
Photography
FIRST BAPTIST CHURCH
CITY OF LENOIR
0314
1304
2314
9219
8265
0158
2280
8085
NORTH MAIN ST
ASHE AVE
Parking Lot Agreement/Coverage
60ft